# Model 6000

## Articulating Crane Owners' Manual

*Safety • Operation • Maintenance • Installation • Parts*

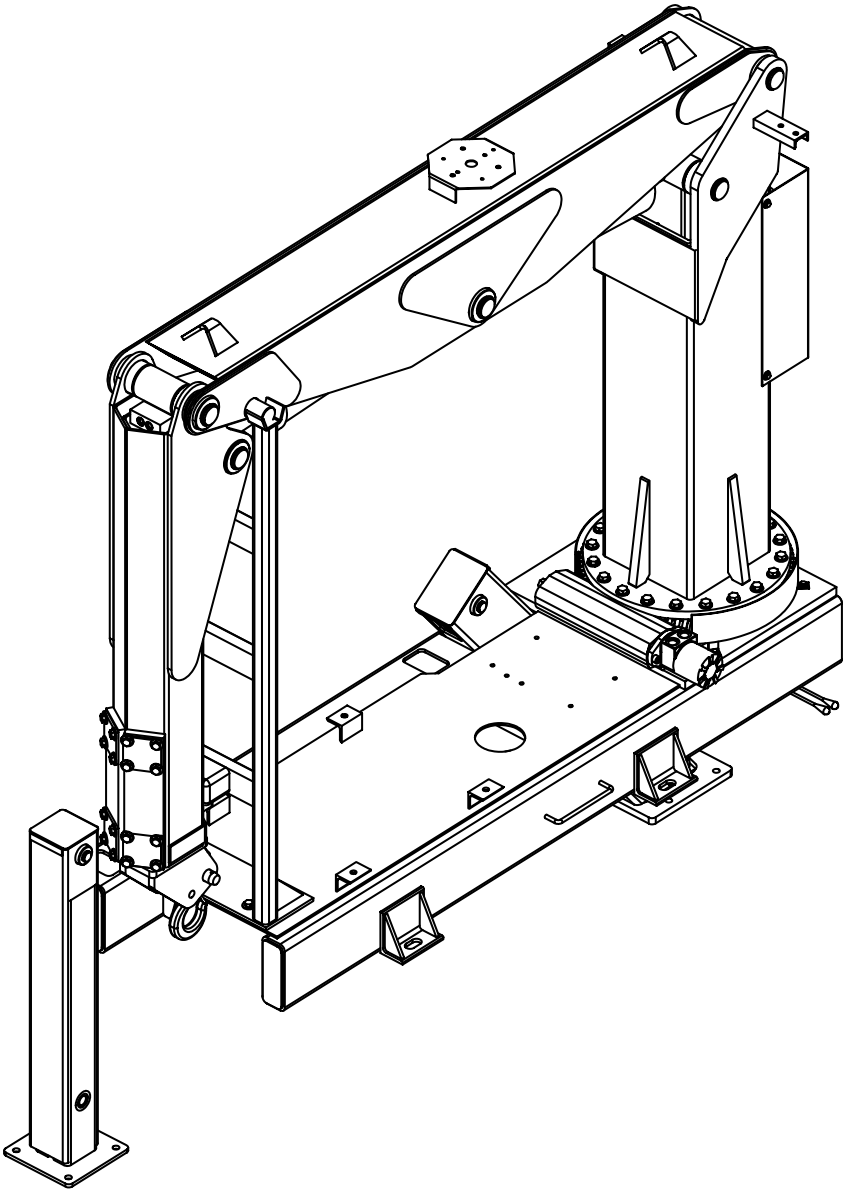


**Stellar Industries, Inc.**
**190 State Street**
**PO Box 169**
**Garner, IA 50438**
**800-321-3741**
**Fax: 641-923-2811**
**www.stellarindustries.com**


Subject to Change without Notification.


Last Revision: 05/21/14

# 6000 Manual Revisions

| Date of Revision | Section Revised | Description of Revision |
|---|---|---|
| October 22, 2008 | **Chapter 8:**<br>Hydraulics-Electrical<br>**Chapter 9:**<br>Replacement Parts | Updated Hydraulic Kit Versions to reflect engineering changes (New Pressure Switch). |
| August 1, 2009 | **Chapter 7:**<br>Assembly Drawings<br>**Chapter 8:**<br>Hydraulics-Electrical<br>**Chapter 9:**<br>Replacement Parts | Updated Mast Assembly, Control Kit, Valve Bank, and Replacement Parts to reflect engineering changes. |
| | | |

# Table of Contents

*Introduction* . . . . . *ii*
**Chapter 1 - Safety . . . . . 1**
**Chapter 2 - Operation . . . . . 3**
Unit Operation Overview . . . . . 3
Manual Operation . . . . . 4
Radio Remote Operation . . . . . 4
Hook Precautions . . . . . 5
Crane Transport . . . . . 5
Crane Precautions . . . . . 5
Operator Information . . . . . 6
**Chapter 3 - Maintenance . . . . . 7**
Lubrication Recommendations . . . . . 9
Torque Data Chart . . . . . 10
Inspection Checklist . . . . . 11
Daily Inspection . . . . . 12
Monthly Inspection . . . . . 13
Quarterly Inspection . . . . . 14
Annual Inspection . . . . . 16
Inspection Notes . . . . . 17
**Chapter 4 - Specifications . . . . . 19**
Capacity Chart - Decal PN 20038 . . . . . 20
**Chapter 5 - Decals . . . . . 21**
Crane Cover Decals . . . . . 22
Decal Kit Placement Kit 13356 . . . . . 25
**Chapter 6 - Installation . . . . . 27**
General Installation . . . . . 27
Installation Notice . . . . . 27
Installation Overview . . . . . 27
**Chapter 7 - Assembly Drawings . . . . . 29**
Base Assembly - PN 22140 . . . . . 29
Mast Assembly - PN 22141 . . . . . 30
Main Boom Assembly - PN 22142 . . . . . 31
Extension Boom Assembly - PN 22143 . . . . . 32
**Chapter 8 - Hydraulics - Electrical . . . . . 33**
Control Kit - PN 52257 . . . . . 34
Hydraulic Kit - PN 13040 . . . . . 35
Valve Bank - PN 44530 . . . . . 36
Hetronic Radio Remote - PN 34102 . . . . . 37
**Chapter 9 - Replacement Parts . . . . . 39**
**Chapter 10 - Troubleshooting . . . . . 41**
Troubleshooting continued... . . . . 43
6 Function Hetronic Radio Remote Troubleshooting . . . . . 46
Receiver Troubleshooting . . . . . 47
Transmitter Troubleshooting . . . . . 47
*Warranty Information* . . . . . *48*

# Introduction

Stellar Cranes are designed to provide safe and dependable service for a variety of operations. With proper use and maintenance, these cranes will operate at peak performance for many years.

To promote this longevity, carefully study the information contained in this manual before putting the equipment into service. Though it is not intended to be a training manual for beginners, this manual should provide solid guidelines for the safe and proper usage of the crane.

Once you feel comfortable with the material contained in this manual, strive to exercise your knowledge as you safely operate and maintain the crane. This process is vital to the proper use of the unit.

**A few notes on this manual:**
A copy of this manual is provided with every crane and shall remain with the crane at all times. Information contained within this manual does not cover all maintenance, operating, or repair instructions pertinent to all possible situations.

Please be aware that some sections of this manual contain information pertaining to Stellar manufactured cranes in general and may or may not apply to your specific model.

This manual is not binding. Stellar Industries, Inc. reserves the right to change, at any time, any or all of the items, components, and parts deemed necessary for product improvement or commercial/production purposes. This right is kept with no requirement or obligation for immediate mandatory updating of this manual.

**In closing:**
If more information is required or technical assistance is needed, or if you feel that any part of this manual is unclear or incorrect, please contact the Stellar Customer Service Department by phone at 800-321-3741 or email at service@stellarindustries.com.

**ATTENTION**
**Failure to adhere to the instructions could result in property damage or even serious bodily injury to the operator or others close to the crane.**

**For Technical Questions, Information, Parts, or Warranty, Call Toll-Free at**
**800-321-3741**
Hours: Monday - Friday, 8:00 a.m. - 5:00 p.m. CST

Or email at the following addresses:

| | |
|---|---|
| **Technical Questions, and Information** | service@stellarindustries.com |
| **Order Parts** | parts@stellarindustries.com |
| **Warranty Information** | warranty@stellarindustries.com |

# Chapter 1 - Safety

**Please Read the Following Carefully!** This portion of the manual contains information regarding all Stellar manufactured cranes. Some items contained within this chapter may not apply to your specific equipment.

Safety should be the number one thought on every operator's mind. Three factors should exist for safe operation: a qualified operator, well-maintained equipment, and the proper use of this equipment. The following information should be read and understood completely by everyone working with or near the crane before putting the unit into operation.

Please take note that Stellar Industries, Inc. is not liable for accidents incurred by the crane because of non-fulfillment from the operator's side of current rules, laws, and regulations.

**GENERAL**
It is the responsibility of the owner to instruct the operator in the safe operation of your equipment and to provide the operator with properly maintained equipment.

Trainees or untrained persons shall be under the direct supervision of qualified persons.

Do not operate equipment under the adverse influence of alcohol, drugs, or medication.

**PERSONAL SAFETY**
Keep clear of all moving parts.

Always wear the prescribed personal safety devices.

Always wear approved accident-prevention clothing such as: protective helmets, anti-slip shoes with steel toes, protective gloves, anti-noise headphones, protective glasses, and reflective jackets with breathing apparatus. Consult your employer regarding current safety regulations and accident-prevention equipment.

Do not wear rings, wristwatch, jewelry, loose-fitting or hanging clothing such as ties, torn garments, scarves, unbuttoned jackets or unzipped overalls, which could get caught up in the moving parts of the crane.

Keep a first-aid box and a fire extinguisher readily available on the truck. Regularly check to make sure the fire extinguisher is fully charged and the first-aid kit is stocked.

Do not use controls and hoses as handholds. These parts move and cannot provide stable support.

Never allow anyone to ride the crane hook or load.

**MAINTENANCE SAFETY**
Never modify or alter any of the equipment, whether mechanical, electrical, or hydraulic, without explicit approval from Stellar Industries.

Do not perform any maintenance or repair work on the crane unless authorized and trained to do so.

Release system pressure before attempting to make any adjustments or repairs.

Do not attempt service or repair when the PTO is engaged.

Failure to correctly plumb and wire the crane can cause a malfunction and damage to the crane and/or operator.

Decals are considered safety equipment. They must be maintained, as would other safety devices. Do not remove any Decals. Replace any Decals that are missing, damaged, or not legible.
The safety instruction plates, notices, load charts and any other sticker applied to the crane or service body must be kept legible and in good condition. If necessary, replace them.

**STABILITY**
Know the crane components and their capabilities and limitations. Overloading the crane may result in serious injury to self and others, and damage to the equipment and immediate surroundings.

Never exceed manufacturer's load ratings. These ratings are based on the machine's hydraulic, mechanical, and structural design rather than stability.

The supporting surface under the service truck must be able to support the weight of the machine and its load. Use outrigger pads if necessary.

Park the vehicle on level ground and extend the outriggers fully out and then down.

Keep feet and legs clear when lowering outrigger jacks.

Never operate the crane without making sure the outriggers are positioned on stable, flat ground.

Set the parking brake and disengage the drive axle before attempting a lift.

**LOAD SAFETY**
Operate the crane in compliance with the load capacity chart at all times. Know the weight of the load being lifted. Do not rely on the overload device to determine maximum rated loads.

Never use a sling bar or anything larger than the hook throat that could prevent the hook latch from closing. This would negate the safety feature.

Do not apply side loads to the booms.
Do not leave a crane load suspended or unattended.

Do not walk under suspended loads.

Do not position any load over a person nor should any person be permitted to place him or herself under a load.

Do not use the boom or the winch to drag a load.

Do not use the crane boom to push downward onto anything.

**ELECTROCUTION**
Allow extra space for swaying power lines in windy conditions.

Keep a minimum of ten feet between any portion of the crane and an electrical line. Add an additional 12" for every additional 30,000 Volts or less.

Remember - Death or serious injury can occur when working near power lines or during electrical storms.

Use a signal person when operating near electrical sources.

**ENVIRONMENT**
Do not operate the crane during electrical storms.

In extreme cold, allow adequate time to warm the truck before engaging the PTO. Do not rev the truck engine and over speed the hydraulic pumps as permanent damage to the pumps may occur. Follow the vehicle owner's manual regarding operating the vehicle in such adverse conditions.

In dusty work areas, every effort must be taken to keep dust and sand out of the moving parts of the machinery.

In high humidity work areas, keep parts as dry as possible and well lubricated.


# Crane Controls

1. Be familiar with the sequence and operation of the crane controls.

2. Each individual crane function should have control function decals. Replace them immediately if they are missing or illegible.

3. Keep hands, feet and control levers free from mud, grease and oil.

4. Be familiar with the remote control and how it operates before attempting to lift a load.

5. Be prepared before beginning operation of the crane:
- All protective guards must be in place.
- Be aware of the surroundings: low branches, power lines, unstable ground.
- Be sure all safety devices provided are in place and in good operating condition.
- Be prepared for all situations. Keep fire extinguisher and first aid kit near.
- Be sure all regular maintenance has been performed.
- Visually inspect all aspects of the crane for physical damage.
- Check for fluid leaks.
- Make sure the outriggers are down and stable.

**ATTENTION**
**Stellar Industries, Inc. is not liable for accidents incurred by the crane because of the operator's non-fulfillment of current rules, laws and regulations**

# Chapter 2 - Operation

This chapter contains information regarding the operation of Stellar manufactured articulating cranes. Please study the following pages to ensure your familiarity with the operation process. This understanding is vital to the safe and efficient operation of the crane.

**Job-Site Set-Up**
***Thoroughly plan the lift before positioning the vehicle. Consider the following:***

1. The vehicle should be positioned in an area free from overhead obstructions to eliminate the need for repositioning.

2. Position the vehicle so that it is impossible for any portion of the equipment to come within the minimum required safe distance of any power line. Maintain a clearance of at least 10 feet between any part of the crane, load line, or load, and any electrical line or apparatus carrying up to 50,000 volts. One foot additional clearance is required for every additional 30,000 volts or less. Remember to allow for winds that cause power lines to sway. It is recommended that a signal person be used when the vehicle is set-up near power lines.

3. The vehicle should also be positioned on a firm and level surface that will provide adequate support for the outrigger loading. Use extreme caution when setting up near overhanging banks or excavations.

4. The parking brake must be set on the vehicle and the drive axle disengaged before performing a crane operation.

5. The outriggers must be extended to stabilize the truck before beginning operation.

**NOTICE**
**The parking brake must be fully engaged in order to operate any Stellar Equipment.**

## Unit Operation Overview

1. **Engage the PTO**
2. **Turn on Power to Crane**
3. **Position Outriggers**
4. **Operate Crane**
5. **Store Outriggers**
6. **Turn Off Power to Crane**
7. **Disengage the PTO**

**1. Engage the PTO**
A. Engage the **parking brake.**
B. Place the transmission in the Neutral position.
C. Make certain the PTO switch is in the 'off' position.
D. Start the vehicle engine.
E. Depress the clutch on manual transmission vehicles.
F. Engage the PTO switch for cable and air type shifters. Turn on the dash switch for electrical operated style. Consult vehicle owner's manual for location and operation of OEM style in-dash PTO switch.
G. Slowly release the clutch on a manual transmission vehicle.
H. Allow a few moments to warm the hydraulic system oil. In cold weather, it is especially important to let the system run for a few minutes before operating.

PTO Switch

**2. Turn on Power to Crane**
Activate power to the crane and outriggers. The power switch is located on the control panel in the vehicle cab.

**3. Position Outriggers**
Once the PTO is engaged, extend the outriggers using the control levers or switches marked 'outrigger'. These may be located on the crane base or in the compartment under the crane.

**4.Operate Crane**
A. Turn on necessary power to the crane.
B. Activate toggle switch for desired crane function.
D. Activate the variable speed trigger to control the desired function.
E. When operation is complete, store remote handle in a safe, dry location.

**5. Store Outriggers**
Retract outriggers using the control levers or switches marked 'outrigger'.

**6. Turn Off Power to Crane**
Deactivate power to crane and outriggers.

**7. Disengage the PTO**
A. On manual transmission vehicles, depress the clutch pedal completely.
B. Disengage the PTO switch.
C. If vehicle is a manual transmission, release the clutch pedal gradually.

# Radio Remote Operation

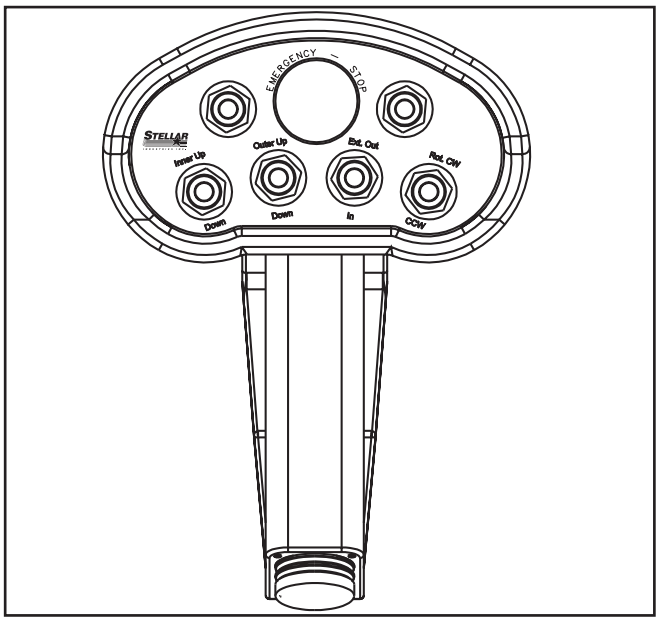


The crane is operated by a radio control system which operates an electronic valve bank. The controller (as shown above) operates the following functions:

Main Boom Up and Down
Outer Boom Up and Down
Extension Boom In and Out
Rotation Clockwise and Counter-Clockwise

To operate the crane, activate the desired toggle switch. The crane will not function until the trigger on the remote handle is activated. The crane speed will change as the trigger is pulled or released.

Note: If the crane does not operate, check the batteries located in the remote handle and replace if necessary.

# Manual Operation

In case of radio failure, the crane can be operated using manual overrides located on the valve bank.

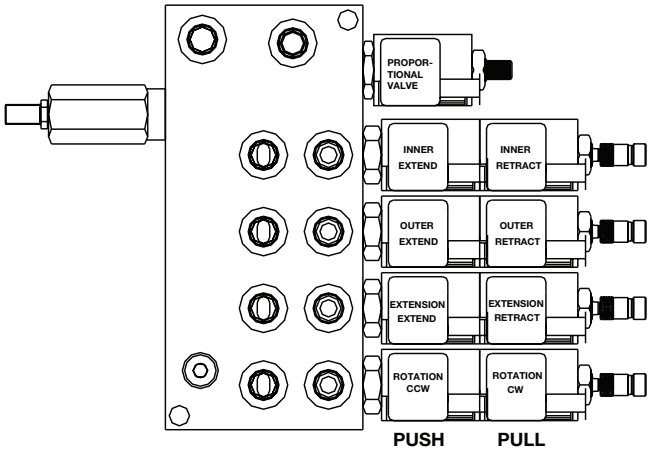


**Valve Manual Override Operation**

1. **<u>Switch to Manual Operation:</u>**
   Turn proportional valve stem counter clockwise 4 to 5 turns.

2. **<u>Operate Levers on the Valve Bank:</u>**
   Push or pull valve stems to operate listed function.

3. **<u>Switch Controls Off:</u>**
   Turn proportional valve stem clockwise until it stops.

4. **<u>Have Unit Serviced.</u>**

**Note About Battery Condition**
The batteries included with this equipment may be rechargeable. To keep rechargeable batteries in optimal working condition, follow these simple guidelines:

1. Keep battery away from moisture. Store in a cool, dry location.
2. Do not store or carry battery so that metal objects can contact exposed metal end. Keep battery cap on when not in use.
3. The batteries should be recharged when they fail to produce sufficient power.
4. Never attempt to open the battery for any reason.

## Crane Precautions

1. Movement of the control levers should be slow and smooth to meter oil flow for safe operation. Avoid jerky and sudden movements.
2. The crane controls should be clearly marked with decals. If these are missing or illegible,replace immediately. (See Chapter 5: Decals)
3. Lift load slightly off the ground to check the safety of the cargo. Do not use stability to determine the safety. Consult the capacity charts and strictly adhere to them.
4. Be constantly aware of the boom position when operating the controls.
5. The boom tip should be centered directly over the load before making the lift to avoid swinging.
6. Do not drag loads with the crane.
7. Do not attempt to lift fixed loads.
8. Do not load boom in a sideways direction.
9. Know the weight of the rigging and load to avoid overloading the crane.
10. Do not extend or rotate a load over anyone.
11. Wear protective gear such as hard hat, safety glasses, steel-toed boots, and gloves.

## Crane Transport

**Before transporting the crane, do the following:**

1. The crane must be in the stored position.
2. Outriggers must be securely stowed and not extended horizontally or vertically.
3. Hook and sheave assemblies must be securely fastened to prevent swinging.
4. All loose accessories, tools, and remote controls must be securely stored in their respective compartments or fasteners.
5. The PTO must be disengaged.
6. The parking brake must not be released until all of the above procedures are completed.
7. Do not drive the carrier vehicle while a load is present on the hook.
8. Do not drive the carrier vehicle with less than proper tire inflation.
9. Do not drive the carrier vehicle in areas where the vertical clearance is unknown.
10. Do not allow personnel to ride on the equipment during transport.

## Hook Precautions

1. Hooks are designed and manufactured to lift specific loads. The specified rated load of a hook applies to loads held uniformly in direct tension and does not take into account shock loads, hook tip loading, side loading, bending, torsional, or related loads.
2. Do not attempt to lift a load that is larger than the load rating of the hook.
3. Never use a hook's yield point as an indicator of its capacity.
4. Do not use a hook to lift personnel.
5. Know the rated load of the hook in use.
6. Never weld attachments to a finished hook in field applications. This will alter and destroy the design properties of the hook material.
7. Keep fingers, hands, body, and loose clothing from between the hook and the load.
8. Avoid shock loading.
9. Inspect the hook regularly for excessive wear and maintain it in safe operating condition.


*The crane MUST be in the stored position before transporting.*

# Operator Information

**OPERATOR REQUIREMENTS**

**1. Operation is limited to the following people:**
- A. Designated individual.
- B. Trainees under direct supervision of the designated individual.
- C. Test or maintenance individual.
- D. Crane Inspector.

**2. Operators must meet the following physical qualifications:**
- A. Vision of at least 20/30 Snellen in one eye and 20/50 in the other, with or without corrective lenses.
- B. Ability to distinguish colors if color differentiation is required.
- C. Adequate hearing, with or without a hearing aid.
- D. No physical or emotional defects that may create a hazard to the operator or others.
- E. Normal depth perception and coordination.

**3. In addition to the physical qualifications, Operators must:**
- A. Demonstrate the ability to understand all decals, the owner's manual, and any other information required for safe operation of the crane.
- B. Be able to demonstrate the ability to safely control the crane.
- C. Know all safety regulations.
- D. Be responsible for maintenance requirements.
- E. Understand and be fully capable of implementing all emergency procedures.
- F. Understand the operating procedures as outlined by this manual, ANSI B30.2, and Federal/State Laws.

**OPERATOR CONDUCT**

1. Operators will not engage in any operation that would cause them to divert attention away from the operation of the crane.
2. Operators are responsible for all operations under their direct control.
3. Operators will not leave a suspended load unattended.
4. Operators will be familiar with the equipment and the maintenance required for proper care.

**HANDLING THE LOAD**

**1. Size of the load:**
- A. Do not load the crane beyond the rated capacity.
- B. It is the responsibility of the operator to know the weight of the handled load.

**2. Attaching the load:**
- A. Attach the load to the hook by means of slings or other approved devices.
- B. Do not wrap the hoist rope around the load.

**3. Moving the load:**
- A. Make certain that the crane is level and properly blocked.
- B. Ensure that the load is secure and balanced within the sling before moving it.
- C. Be sure that the crane is stable before moving the load. Use stabilizer pads to ensure the proper distribution of weight.
- D. Do not drag the load sideways.
- E. Make sure the hook is brought over the load to minimize swinging.
- F. No suspended load should pass over a person.
- G. Avoid sudden starts and stops when moving a load.

# Chapter 3 - Maintenance

**WARNING - Read the Following before performing any maintenance on the crane.**

1. Only authorized service personnel are to perform maintenance on the crane.
2. Disengage the PTO before any service or repair is performed.
3. Do not disconnect hydraulic hoses while there is still pressure in those components.
4. Before disconnecting hydraulic components, place the boom on the ground or have it supported, shut off the engine, release any air pressure on the hydraulic reservoir, and move pedals and control levers repeatedly through their operating positions to relieve all pressures.
5. Keep the crane and service body clean and free from grease build-up, oil and dirt to prevent slippery conditions.
6. Perform all safety and maintenance checks before each period of use.
7. Replace parts with Stellar Industries, Inc. approved parts only.
8. Immediately repair or have repaired any components found to be inadequate.

**Maintenance Procedures**

1. Position the crane where it will be out of the way of other operations or vehicles in the area.
2. Be sure boom is lowered to the ground or otherwise secured from dropping.
3. Place all controls in the off position and secure operating features from inadvertent motion.
4. Disconnect power source.
5. Relieve hydraulic oil pressure from all hydraulic circuits before loosening or removing hydraulic components.
6. Label or tag parts when disassembling.

**Daily Inspection**

*Daily Inspection should occur each day before the crane is put into use. Each day, inspect the crane for all of the following:*

1. Hydraulic oil level.
2. Loose parts or damage to structures or weld.
3. Cylinder movement due to leakage.
4. Hoses and gearboxes for evidence of oil leaks.
5. Controls, including hand throttle for malfunction or adjustment.
6. Truck hand brake operation.
7. All securing hardware such as cotter pins, snap rings, hairpins, and pin keepers for proper installation.
8. All safety covers for proper installation.
9. Cylinder holding valves for proper operation.
10. Wire rope for broken wires, extensive wear, distortion, and heat damage.

**Periodic Inspection**

*Periodic Inspection should occur while the crane is in use. For the duration of the usage, inspect the crane for all of the following:*

1. Loose bolts and fasteners.
2. All pins, bearings, shafts, and gears for wear, cracks, or distortion to include all pivots, outriggers, sheave pins, and bearings.
3. Hydraulic systems for proper operating pressure.
4. Main frame mount bolts.
5. Cylinders for:
   A. Damaged rods.
   B. Dented barrels.
   C. Drift from oil leaking internally.
   D. Leaks at rod seals or holding valves.
6. PTO drive line system for proper alignment, lubrication, and tightness.
7. Hydraulic hose and tubing for evidence of damage such as blistering, crushing, or abrasion.

**Weekly Inspection**

*Weekly Inspection should occur at the beginning of every work week. Each week, inspect the crane for all of the following:*

1. Lubrication of points required by lubrication chart located in this chapter.
2. Proper operation of load hook safety latch.
3. Presence of this owner's manual.

**Monthly Inspection**

*Monthly Inspection should occur at the beginning of every work month. Each month, inspect the crane for all of the following:*

1. Frame bolt tightness - turn barrel nuts and mounting bolts during the first month of operation on new machines and then quarterly thereafter.
2. Cylinders and valves for leaks.
3. Lubrication.
4. Load hook for the following:
   a. Cracks or having more than 5% normal throat opening.
   b. Any visible bend or twist from the plane of the unbent hook.
5. Structural members for bends, cracks, or broken members.
6. All welds for breaks and cracks.
7. All pins and keepers for proper installation.
8. All control, safety, and capacity placards for readability and secure attachment.
9. Inspect all electrical wires and connections for worn, cut, or deteriorated insulation and bare wire. Replace or repair wires as required.
10. Tightness of all boom wear, pad-retaining bolts.

**ATTENTION**
**Every six (6) months, remove the hydraulic pump from the PTO and lubricate the splines using Chelsea Lubricant #379831 or Stellar PN 20885. Failure to lubricate shaft splines will cause damage to the PTO and Hydraulic pump.**

**Service**

*The following general suggestions should be helpful in analyzing and servicing your crane. Using the following systematic approach should be helpful in finding and fixing problems:*

1. Determine the problem.
2. List and record possible causes.
3. Devise checks.
4. Conduct checks in a logical order to determine the cause.
5. Consider the remaining service life of components against the cost of parts and labor necessary to replace them.
6. Make the necessary repair.
7. Recheck to ensure that nothing has been overlooked.
8. Functionally test the new part in its system.

**Washing the Crane**

Important: Prior to washing the Stellar® Crane, the radio remote receiver box must be covered to prevent any water from entering the plastic housing. Avoid any direct water pressure to the radio remote receiver.

**Inspection Checklist**

For a more detailed outline of scheduled inspection points, refer to the Stellar Inspection Checklist at the end of this chapter. This list is an excellent guide for the inspection tasks that will help maintain the quality of your Stellar product. Feel free to photocopy the checklist as needed.

**Stellar Industries recommends the first filter change to occur after the first 250 hours of service.* The second, and every subsequent change, should occur after every 1,000 hours of service. By following these guidelines, the hydraulic oil should last up to 6,500 hours.**

***Note: These recommendations are based on normal working parameters. If operating in less than favorable conditions (excessive dust, moisture, etc.), be sure to check the filter gauge often for filter change notice.**

# Lubrication Recommendations

| Component | Location | Recommendation |
|---|---|---|
| Engine | Crankcase | Apply Manufacturer's Recommendations |
| Hydraulic System<br>Below –5*F<br>-5*F to 90*F<br>Above 90*F | Reservoir | <br>Petro-Canada Arctic MV 15 (ISO 22)<br>Petro-Canada HYDREX 32 (ISO 32)<br>Petro-Canada HYDREX 46 (ISO 46) |
| Open Gears | Hand | Precision XL3 Moly EP 2 (NLGI 2 grease with moly) |
| Bearings, grease (including turntable bearing inner race) | Gun | Precision XL EP 2 (NLGI 2) |
| Worm Drive Gearbox | Gearbox | Precision Synthetic EP 00 (NLGI 00) |
| Planetary Gearbox (including winch) | Gearbox | Traxon Synthetic 75W-90 (API GL-5) |
| Wear Pad Lubrication | Spray | Gearshield NC |
| Compressor Fluids<br><br>Reciprocating Single Stage<br>Reciprocating Double Stage | <br><br>Crankcase<br>Crankcase | <br><br>Compro 100 (ISO 100)<br>Compro 100 (ISO 100) |
| Screw<br>-15˚F to 86˚F<br>-23˚F to 100˚F<br>32˚F to 113˚F | Crankcase | <br>Compro XL-S 32 (ISO 32)<br>Compro XL-S 46 (ISO46)<br>Compro XL-S 68 (ISO68) |

## Greasing the Crane

**Lubricate all grease gun points with Extreme Pressure Grease - Stellar P/N: 22059.**

**Holding Valve Inspection Procedure**

*The cylinders are equipped with holding valves that prevent sudden movement of the cylinder rods in the event of a hydraulic hose or hydraulic component failure. The valve is checked in the following manner:*

1. Identify the cylinder in question.
2. Identify the holding valves and the cylinder direction in question.
   a. Cylinder Extend.
   b. Cylinder Retract.
3. Place the machine so that the cylinder will be located in the appropriate testing position.
4. Pick the load (Do not exceed capacity, rated or stability).
5. Disengage hydraulics.
6. Operate crane functions.
   A. If the cylinder creeps (lowering the load), replace the holding valve.
   B. If the cylinder does not creep (load stays suspended), the valve is operational.

**Gear-Bearing Bolt Maintenance**

Anytime a gear-bearing bolt is removed, it must be replaced with a new bolt of the identical grade and size. Once a bolt has been torqued to 75% of its proof load and then removed, the torque coefficient may no longer be the same as when the bolt was new thus giving indeterminate damp loads after torquing.

**Warning!**

**Failure to replace gear-bearing bolts may result in bolt failure due to metal fatigue causing serious injury or even death.**

# Torque Data Chart

*Note: For Crane Tie Down Rods, see Chapter 6: Installation Overview.*

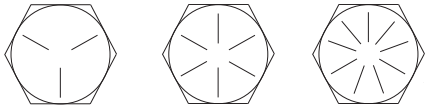


| Size (DIA-TPI) | Bolt DIA (Inches) | Plain (Ft-Lb) | Plated (Ft-Lb) | Plain (Ft-Lb) | Plated (Ft-Lb) | Plated (Ft-Lb) |
|---|---|---|---|---|---|---|
| 5/16-18 | 0.3125 | 17 | 13 | 25 | 18 | 22 |
| 3/8-16 | 0.3750 | 31 | 23 | 44 | 33 | 39 |
| 7/16-14 | 0.4375 | 49 | 37 | 70 | 52 | 63 |
| 1/2-13 | 0.5000 | 75 | 57 | 105 | 80 | 96 |
| 9/16-12 | 0.5625 | 110 | 82 | 155 | 115 | 139 |
| 5/8-11 | 0.6250 | 150 | 115 | 220 | 160 | 192 |
| 3/4-10 | 0.7500 | 265 | 200 | 375 | 280 | 340 |
| 7/8-9 | 0.8750 | 395 | 295 | 605 | 455 | 549 |
| 1-8 | 1.000 | 590 | 445 | 910 | 680 | 823 |
| 1 1/8-7 | 1.1250 | 795 | 595 | 1290 | 965 | 1167 |
| 1 1/4-7 | 1.2500 | 1120 | 840 | 1815 | 1360 | 1646 |
| 1 3/8-6 | 1.3750 | 1470 | 110 | 2380 | 1780 | 2158 |
| 1 1/2-6 | 1.500 | 1950 | 1460 | 3160 | 2370 | 2865 |

*When using the torque data in the charts above, the following rules should be observed.*

1. Bolt manufacturer's particular specifications should be consulted when provided.
2. Flat washers of equal strength must be used.
3. All torque measurements are given in foot-pounds. To convert to inch-pounds, multiply by 12.
4. Torque values specified are for bolts with residual oils or no special lubricants applied. If special lubricants of high stress ability, such as Never-Seez compound graphite and oil, molybdenum disulphite, colloidal copper or white lead are applied, multiply the torque values in the charts by the factor .90. The use of Loctite does not affect the torque values listed above.
5. Torque values for socket-head capscrews are the same as for Grade 8 capscrews.

# Inspection Checklist

Use of this checklist is subject to terms of the Stellar Warranty information. Additional copies of this checklist can be obtained by contacting Stellar Customer Service at (800) 321-3741.

Type of Inspection (check one)

☐ Daily (if deficiency found) ☐ Quarterly

☐ Monthly ☐ Annual

| | |
|---|---|
| Owner/Company: | Date Inspected: |
| Contact Person: | Hour Meter Reading: |
| Crane Make/Model: | Inspected by: (print) |
| Crane Serial: | Signature of Inspector: |

## Type of Inspection Information

Daily and monthly inspections are to be performed by a "designated" person, who has been selected by the employer or the employer's representative as being competent to perform specific duties.

Quarterly and annual inspections are to be performed by a "qualified" person who, by possession of a recognized degree in an applicable field or certificate of professional standing, or who, by extensive knowledge, training and experience has successfully demonstrated the ability to solve or resolve problems related to the subject matter and work.

One hour of normal crane operation assumes 20 complete cycles per hour. If operation exceeds 20 cycles per hour, inspection frequency should be increased accordingly.

Consult the Stellar Owner's Manual for additional inspection items.

Before inspecting and operating the crane, make certain that t he crane is set up away from power lines and leveled with outriggers fully extended.

**Daily (D):** Before each day of operation, those items with a (D) must be inspected. This inspection need not be recorded unless a deficiency is found.

**Monthly (M):** Monthly inspections or 100 hours of normal operation (which ever comes first) includes all daily and monthly inspection items plus items designated with a (Q). This inspection must be recorded.

**Quarterly (Q):** Every three months or 300 hours of normal operation (which ever comes first) includes all daily and monthly inspection items plus items designated with an (M). This inspection must be recorded.

**Annual (A):** Each year or 1200 hours of normal operation (which ever comes first) includes all items on this form which encompasses daily, monthly, and quarterly inspections plus those items designated by (A). this inspection must be recorded.

# Daily Inspection

| Frequency | Key | Inspection Description | Status |
|---|---|---|---|
| D | Decals | All load charts, safety & warning Decals, & control Decals are present and legible. | |
| | | Check all safety devices for proper operation. | |
| D | Controls | Control mechanisms for proper operation of all functions, leaks, & cracks. | |
| D | Station | Control mechanisms for proper operation of all functions, leaks, & cracks. | |
| D | Hydsystem | Hydraulic system (hoses, tubes, & fittings) for leakage & proper oil level. | |
| D | Hook | Presence & proper operation of hook safety latches. | |
| D | Rope | Proper reeving of wire rope on sheaves & winch drum. | |
| D | Pins | Proper engagement of all connecting pins & pin retaining devices. | |
| D | General | Overall observation of crane for damage or missing parts, cracked welds & presence of safety covers. | |
| D | Operation | During operation, observe crane for abnormal performance, unusual wear. If observed, discontinue use & determine cause & severity of hazard. | |
| D | Remote Ctrls | Operate remote control devices to check for proper operation. | |
| D | Electrical | Operate all lights, alarms, etc. to check for proper operation. | |
| D | Anti 2-Blocking | Operate anti 2-blocking device to check for proper operation. | |
| D | Operation Aid | Check presence of boom angle indicator. | |
| D | Operation Aid | Check overload device for proper operation. | |
| | | | |
| | | | |
| | | | |
| | | | |
| | | | |
| | | | |
| | | | |
| | | | |
| | | | |
| | | | |
| | | | |
| | | | |

## Monthly Inspection

| Frequency | Key | Inspection Description | Status |
|---|---|---|---|
| M | Daily | All Daily Inspections. | |
| M | Cylinders | Visual inspection of cylinders for leakage at rod, fittings, & welds. Damage to rod & case. | |
| M | Valves | Holding valves for proper operation. | |
| M | Valves | Control valve for leaks at fittings & between sections. | |
| M | Valves | Control valve linkages for wear, smoothness of operation & tightness of fasteners. Relief valve for proper pressure settings. | |
| M | General | Bent, broken or significantly rusted/corroded parts. | |
| M | Electrical | Electrical systems for presence of dirt, moisture & frayed wires. | |
| M | Structure | All structural members for damage. | |
| M | Welds | All welds for breaks & cracks. | |
| M | Pins | All pins for proper installation & condition. | |
| M | Hardware | All bolts, fasteners & retaining rings for tightness, wear & corrosion. | |
| M | Wear Pads | Condition of wear pads. | |
| M | Pump & Motor | Hydraulic pumps & motors for leakage at fittings, seals & between sections. Check tightness of mounting bolts. | |
| M | PTO | Transmission/PTO for leakage, abnormal vibration & noise, alignment & mounting bolt torque. | |
| M | Hyd Fluid | Quality of hydraulic fluid and for presence of water. | |
| M | Hyd Lines | Hoses & tubes for leakage, abrasion damage, blistering, cracking, deterioration, fitting leakage, & secured properly. | |
| M | Hook | Load hook for abnormal throat distance, twist, wear, & cracks. | |
| M | Rope | Condition of load line. | |
| M | Manual | Presence of operator's manuals with the unit. | |
| M | Chassis | Tire wear and air pressure. | |
| M | Chassis | Working backup alarm. | |
| M | Station | Fire extinguisher at cab or machinery housing. | |
| | | | |
| | | | |
| | | | |
| | | | |
| | | | |

## Quarterly Inspection

| Frequency | Key | Inspection Description | Status |
|---|---|---|---|
| Q | Daily | All daily inspections. | |
| Q | Monthly | All monthly inspections. | |
| Q | Rotation Sys | Rotation bearing for proper torque of all mounting bolts. | |
| Q | Hardware | Base mounting bolts for proper torque. | |
| Q | Structure | All structural members for deformation, cracks, & corrosion. | |
| | | Base | |
| | | Outrigger beams & legs | |
| | | Mast | |
| | | Inner boom | |
| | | Outer boom | |
| | | Extension(s) | |
| | | Jib boom | |
| | | Jib extension(s) | |
| | | Other | |
| | | Other | |
| Q | Hardware | Pins, bearings, shafts, gears, rollers, & locking devices for wear, cracks, corrosion, & distortion. | |
| | | Inner boom pivot pin(s) & retainer(s) | |
| | | Outer boom pivot pin(s) & retainer(s) | |
| | | Inner boom cylinder pin(s) & retainer(s) | |
| | | Outer boom cylinder pin(s) & retainer(s) | |
| | | Extension cylinder pin(s) & retainer(s) | |
| | | Jib boom pin(s) & retainer(s) | |
| | | Jib cylinder pin(s) & retainer(s) | |
| | | Jib extension cylinder pin(s) & retainer(s) | |
| | | Boom tip attachments | |
| | | Other | |
| | | Other | |

## Quarterly Inspection Continued...

| Frequency | Key | Inspection Description | Status |
|---|---|---|---|
| Q | Hyd Lines | Hoses, fittings, & tubing for proper routing, leakage, blistering, deformation, & excessive abrasion. | |
| | | Pressure line(s) from pump to control valve | |
| | | Return line(s) from control valve to reservoir | |
| | | Suction line(s) from reservoir to pump | |
| | | Pressure line(s) from control valve to each function | |
| | | Load holding valve pipe(s) and hose(s) | |
| | | Other | |
| Q | Pumps&Motors | Pumps and motors for loose bolts/fasteners, leaks, noise, vibration, loss of performance, heating and excess pressure. | |
| | | Winch motor(s) | |
| | | Rotation motor(s) | |
| | | Other | |
| Q | Valves | Hydraulic valves for cracks, spool return to neutral, sticking spools, relief valve failure. | |
| | | Main control valve | |
| | | Load holding valve(s) | |
| | | Outrigger or auxiliary control valve(s) | |
| | | Other | |
| Q | Cylinders | Hydraulic cylinders for drifting & leakage. Rods for nicks, scores, & dents. Castor damage. Case & rod ends for damage & abnormal wear. | |
| | | Outrigger cylinder(s) | |
| | | Inner boom cylinder(s) | |
| | | Outer boom cylinder(s) | |
| | | Extension cylinder(s) | |
| | | Rotation cylinder(s) | |
| | | Jib lift cylinder(s) | |
| | | Jib extension cylinder(s) | |
| | | Other | |
| Q | Winch | Winch, sheaves, & drums for damage, abnormal wear, abrasion, & other irregularities. | |
| Q | Hyd Filter | Hydraulic filters for replacement per maintenance schedule. | |

## Annual Inspection

| Frequency | Key | Inspection Description | Status |
|---|---|---|---|
| A | Daily | All daily inspection items. | |
| A | Monthly | All monthly inspection items. | |
| A | Quarterly | All quarterly inspection items. | |
| A | Hyd System | Hydraulic fluid change per maintenance schedule. | |
| A | Controls | Control valve calibration for correct pressures & relief valve settings. | |
| A | Valves | Safety valve calibration for correct pressures & relief valve settings | |
| A | Valves | Valves for failure to maintain correct settings. | |
| A | Rotation Sys | Rotation drive system for proper backlash clearance & abnormal wear, deformation, & cracks. | |
| A | Lubrication | Gear oil change in rotation drive system per maintenance schedule. | |
| A | Hardware | Check tightness of all fasteners and bolts. | |
| A | Wear Pads | Wear pads for excessive wear. | |
| A | Loadline | Loadline for proper attachment to drum. | |
| A | Historic Data | Monthly inspection records. | |
| A | Historic Data | Maintenance records. | |
| A | Historic Data | Repair and modification records. | |
| | | | |
| | | | |
| | | | |
| | | | |
| | | | |
| | | | |
| | | | |
| | | | |
| | | | |
| | | | |
| | | | |
| | | | |

## Inspection Notes

# Chapter 4 - Specifications

**Model 6000 Crane**
**SPECIFICATION SHEET**

| | |
|---|---|
| Crane Rating: | 60,000 ft-lbs (8.30 ton meters) |
| Standard Boom Length: | 11' (3.35 m) from CL of Crane<br>14' (4.27 m) from CL of Truck |
| Boom Extension: | Hydraulic 32" (81.3 cm) |
| Maximum Horizontal Reach: | 14' (4.27 m) from CL of Crane<br>17' (5.18 m) from CL of Truck |
| Maximum Vertical Lift:<br>(From Truck Frame) | 20' (6.10 m) from Truck Frame |
| Cylinder Specifications | |
| Inner Lift Cylinder: | 6" (15.24 cm) bore with integral pilot operated counterbalance valves. |
| Outer Lift Cylinder: | 5" (12.70 cm) bore with integral pilot operated counterbalance valves. |
| Extension Cylinder: | 3" (7.62 cm) bore with integral pilot operated counterbalance valves. |
| Rotation:<br>(Worm Gear Drive) | 290 degree power |
| Lifting Capacities:<br>(From CL of Truck) | 10,000 lbs @ 9' (4535 kg @ 2.74 m)<br>4,250 lbs @ 17' (1930 kg @ 5.18 m) |
| Power Supply Required: | PTO & Pump<br>(6.0 gpm @ 2850 psi)<br>(22.7 lpm @ 197 bars) |
| Controls:<br>functions. | Proportional Radio Controls standard for all |
| Stowed Height:<br>(Above Truck Frame) | 75" (190.5 cm) above Truck Frame |
| Mounting Space Required: | 32" (81.3 cm) |
| Approximate Shipping Weight: | 3,150 lbs (1,430 kg) |

# Capacity Chart - Decal PN 20038

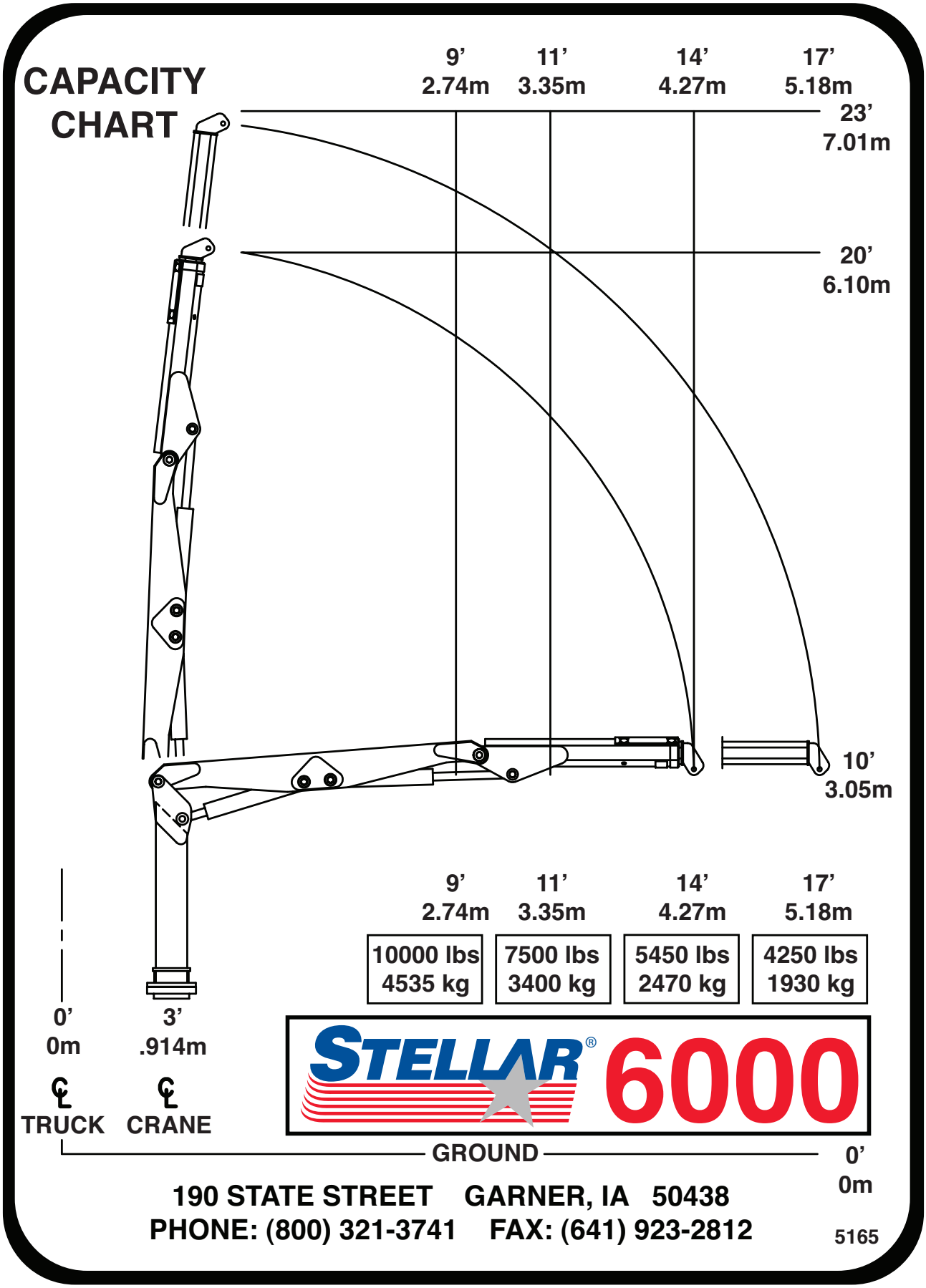

# Chapter 5 - Decals

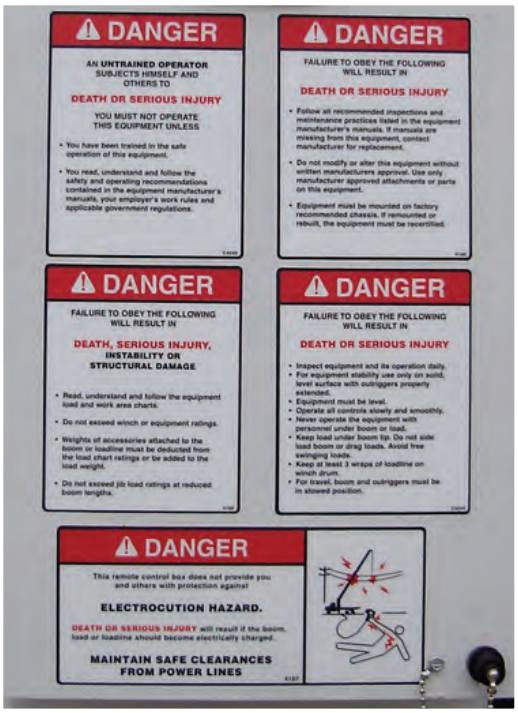


Crane Cover Decals


Crane Outrigger Decals

# Crane Cover Decals


## Electrocution Hazard Decal

**Location:** Crane Cover

**Function:** To inform the operator and other personnel in the work area of the hazard associated with contact or proximity to electrical lines, the possible consequences should the hazard occur and how to avoid the hazard.

PN: 4187


Crane Cover Decals

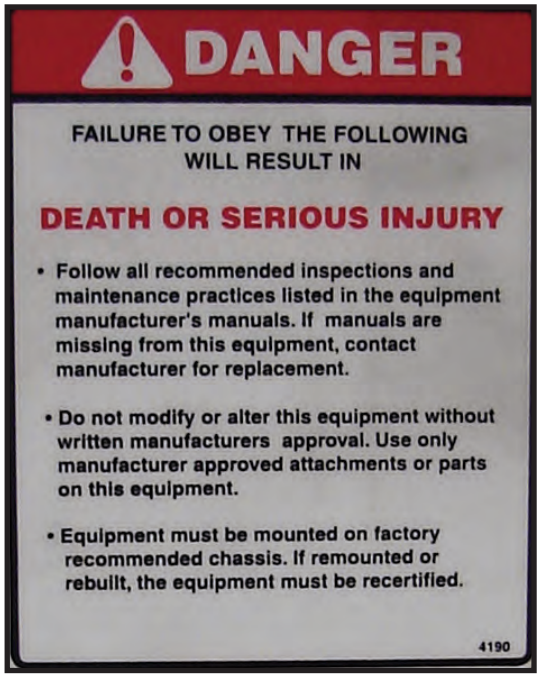


## Operation Hazard Decal

**Location:** Crane Cover

**Function:** To inform the operator and other personnel in the work area of the hazard associated with improper maintenance and unauthorized modifications, the possible consequences should the hazard occur, and how to avoid the hazard.

PN: 4190


## Operation Hazard Decal

**Location: Crane Cover**

**Function:** To inform the operator of the need for proper training, familiarity with safe operating procedures and , the possible consequences without training.

PN: C4540

# Crane Base Decals


## Operation Hazard Decal

**Location: Crane Base**

**Function:** To inform the operator of the need for proper training, familiarity with safe operating procedures, and the possible consequences of operation without training.

PN: C4544

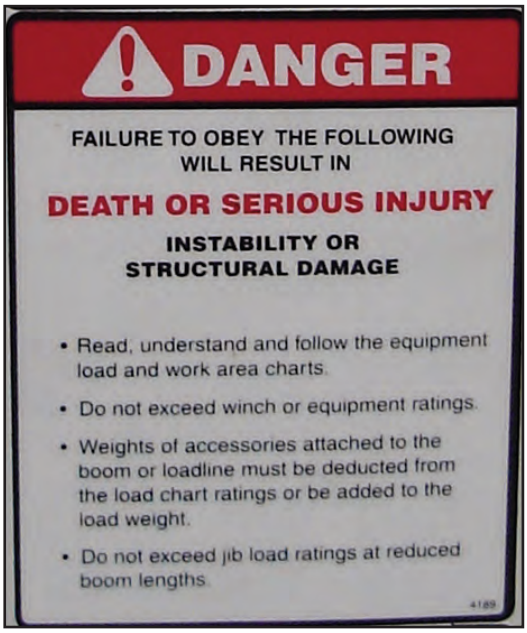


## Operation Hazard Decal

**Location: Crane Base**

**Function:** To inform the operator of the hazard associated with overloading the crane, the possible consequences should the hazard occur, and how to avoid the hazard.

PN: 4189


## Electrocution Hazard Decal

**Location:** Crane Base

**Function:** To inform the operator and other personnel in the work area of the hazard associated with contact or proximity to electrical lines, the possible consequences should the hazard occur and how to avoid the hazard.

PN: C1179

# Outrigger Decals


## Foot Crushing Hazard Decal

**Location:** Outrigger Leg
**Function:** To inform the operator and other personnel in the work area of the hazard associated with the operation of the outriggers, the possible consequences should the hazard occur, and how to avoid the hazard.
PN: C4795

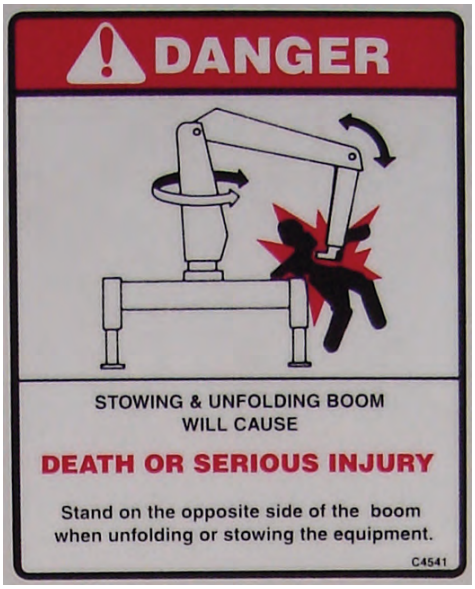


## Moving Boom Hazard Decal

**Location:** Crane Base
**Function:** To inform the operator and other personnel in the work area of the hazard associated with a moving boom, especially while stowing and unfolding the crane, the possible consequences should the hazard occur, and how to avoid the hazard.
PN: C4541

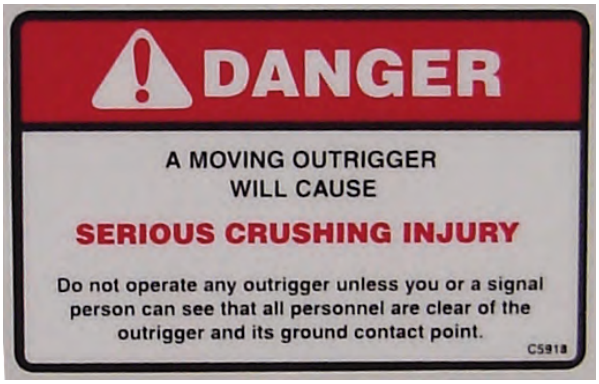


## Moving Outrigger Hazard Decal

**Location:** Outrigger Leg
**Function:** To inform the operator of the hazard associated with outrigger operation, the possible consequences should the hazard occur, and how to avoid the hazard.
PN: C5918


Crane Outrigger Decals

# Decal Kit Placement Kit 13356

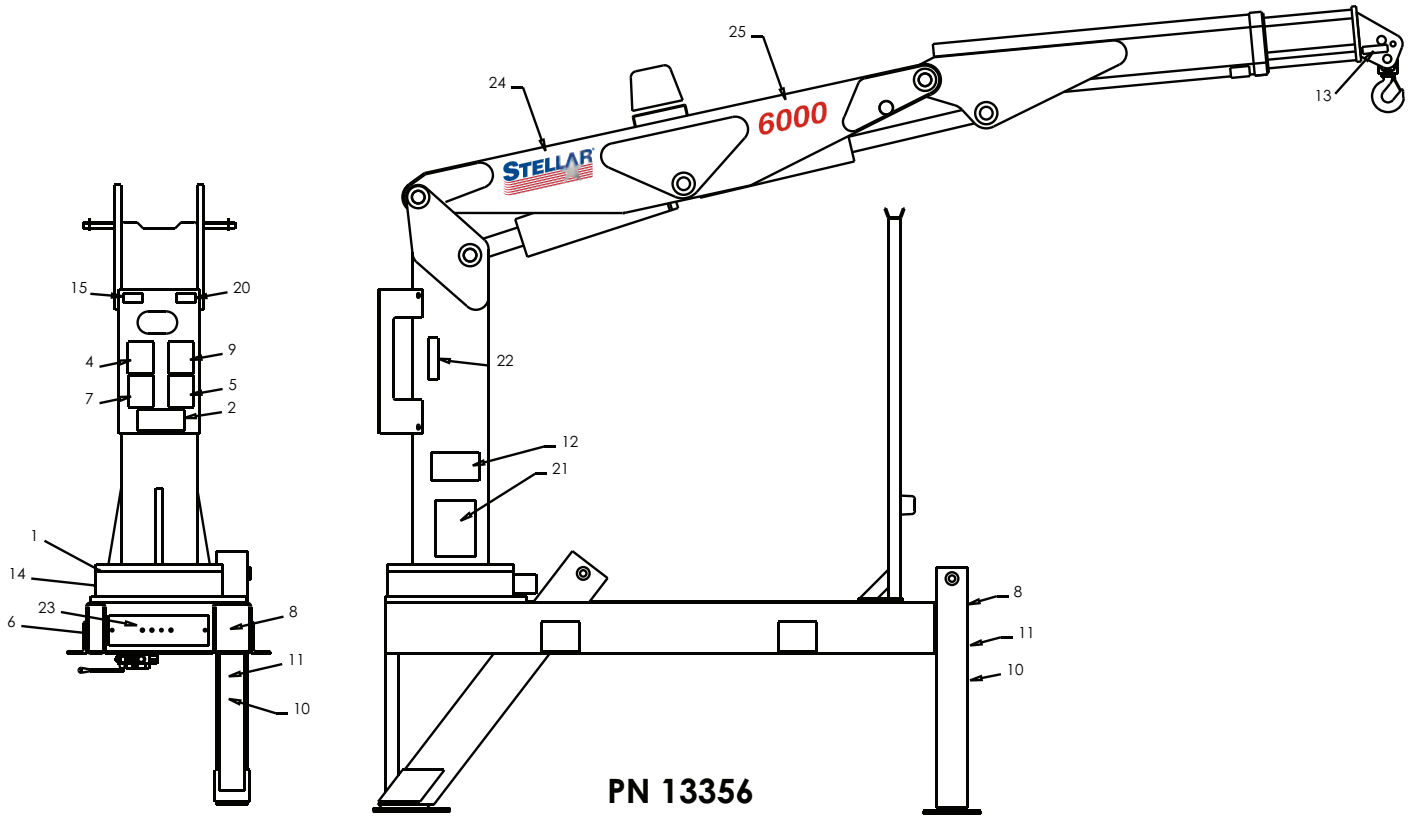


| ITEM | PART No. | DESCRIPTION | QTY |
|---|---|---|---|
| 25 | 54593 | DECAL-6000 IDENTIFICATION | 2 |
| 24 | 53850 | DECAL-STELLAR LOGO 4.00X11.50 | 2 |
| 23 | 4158 | DECAL-OR PANEL | 1 |
| 22 | 41331 | DECAL VB CONTROL TIRE CRANE | 1 |
| 21 | 5165 | DECAL-CAPACITY | 2 |
| 20 | 4214 | DECAL-SERVICE | 1 |
| 19 | 4305 | DECAL-FLOOD LIGHT | 1 |
| 18 | C0568 | DECAL-DIESEL FUEL ONLY | 2 |
| 17 | C5911 | DECAL-STELLAR 2x4.5 | 3 |
| 16 | C5910 | DECAL-STELLAR 4x9.5 | 1 |
| *15 | 35234 | DECAL STELLAR MADE IN THE USA | 1 |
| 14 | 9188 | DECAL WORM GEAR LUBRICATION | 1 |
| 13 | 16973 | DECAL-STELLAR APPROVED ATTACHMT | 2 |
| 12 | C1179 | DECAL-ELECTROCUTION 4.5x7.5 | 2 |
| 11 | C5918 | DECAL-DANGER MOVING O.R. | 2 |
| 10 | C4795 | DECAL-DANGER O.R. | 2 |
| 09 | 4190 | DECAL-DANGER | 1 |
| 08 | C4541 | DECAL-DANGER STOWING | 2 |
| 07 | 4189 | DECAL-DANGER | 1 |
| 06 | 13036 | DECAL-CRANE OUTRIGGER | 1 |
| 05 | C4544 | DECAL-DANGER | 1 |
| 04 | C4540 | DECAL-DANGER | 1 |
| 03 | C4545 | DECAL-ELECTROCUTION 5x13 | 4 |
| 02 | 4187 | DECAL-ELECTROCUTION 3.25x7.5 | 1 |
| 01 | 4188 | DECAL-ALIGNMENT | 1 |

THESE DECALS NOT SHOWN
(USE WITH BODY PACKAGE)

*THESE DECALS NOT INCLUDED WITH THE DECAL KIT

# Chapter 6 - Installation

## Notice: Read this Page Before Installation of the Crane

### General Installation

This chapter is designed to serve as a general guide for the installation of a Stellar 6000 Articulating Crane on a Stellar Service Body. Each installation is considered unique so certain portions of this chapter may or may not apply to your direct application. If a question should arise during the installation process, please contact Stellar Customer Service at (800) 321 3741.

This crane is designed for use with a Stellar Service Body installed on a vehicle that meets the minimum chassis requirements of the crane. Check with Stellar Industries before installing this crane on a body other than a Stellar Service Body.

**WARNING!**
**The use of this crane on a body not capable of handling the loads imposed on it may result in serious injury or death.**

**Notice:**
PTO and Pump installation instructions are provided by the corresponding manufacturers. For more information on which PTO and Pump fit your application, please contact your local Stellar Distributor or Stellar Customer Service.

### Installation Notice

According to Federal Law (49 cfr part 571), each final-stage manufacturer shall complete the vehicle in such a manner that it conforms to the standards in effect on the date of manufacture of the incomplete vehicle, the date of final completion, or a date between those two dates. This requirement shall, however, be superseded by any conflicting provisions of a standard that applies by its terms to vehicles manufactured in two or more stages.

Therefore, the installer of Stellar cranes and bodies is considered one of the manufacturers of the vehicle. As such a manufacturer, the installer is responsible for compliance with all applicable federal and state regulations. They are required to certify that the vehicle is in compliance with the Federal Motor Vehicle Safety Standards and other regulations issued under the National Traffic and Motor Vehicle Safety Act.

Please reference the Code of Federal Regulations, title 49 - Transportation, Volume 5 (400-999), for further information, or visit http://www.gpoaccess.gov/nara/index.html for the full text of Code of Federal Regulations.

## Installation Overview

**Installation Guidelines (For more detail, please contact Stellar Customer Service)**

1. Locate mounting brackets and clamp to chassis1" (min) from rear of cab (or desired location).
2. Set crane on chassis and check for interferences.
3. Using mounting bracket as a guide, mark holes to be drilled into truck frame.
4. Remove mounting brackets and drill holes.
5. Mount brackets using 3/4" Grade 8 bolts, flast washers, and nyloc nuts.
6. Lower crane onto mounting brackets.
7. Mount crane using 1" Grade 8 bolt, flat washers, and nyloc nuts.
8. Connect pressure and return lines per hydraulic kit.
9. Connect (+12V) Power and ground wires inside crane box.
10. Check reservoir for oil and fill if necessary.
11. Operate crane several cycles.

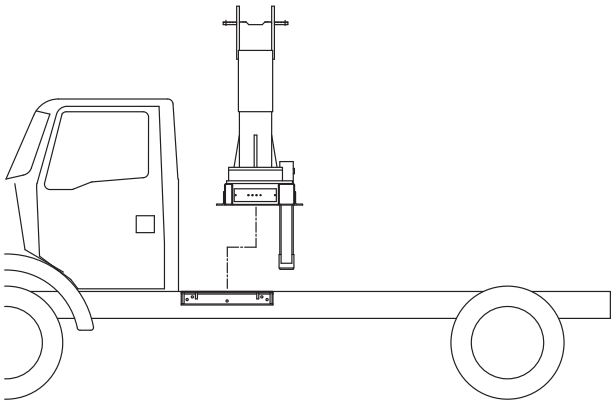

| ITEM | PART No. | DESCRIPTION | QTY |
|---|---|---|---|
| 01 | 38670PC | TIE DOWN, 9000 CRANE | 2 |
| 02 | 58681 | CAP SCR, 0.75–10 X 2.50 HHGR8 | 10 |
| 03 | C6219 | WASHER, FLAT .75 SAE | 20 |
| 04 | C0538 | NUT, 0.75–10 NYLOC | 10 |
| 05 | 5199 | CAP SCR, 1.00–8 X 3.00 HHGR8 | 4 |
| 06 | 6538 | WASHER, 1.00 FLAT SAE | 8 |
| 07 | 6294 | NUT, 1.00–8 NYLOC | 4 |
| 08 | 56180PC | TIE DOWN PLATE | 4 |

# Chapter 7 - Assembly Drawings

## Base Assembly - PN 22140

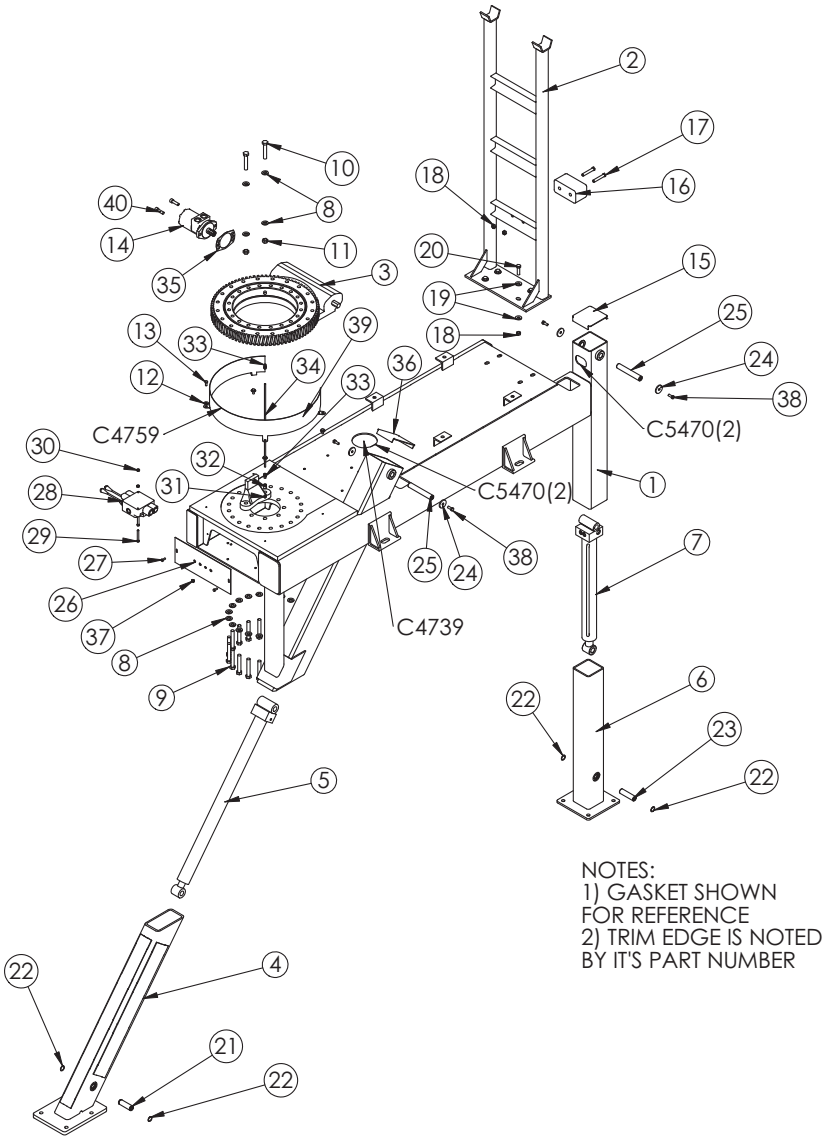


### PN 22140

| ITEM | PART | DESCRIPTION | QTY. |
|---|---|---|---|
| 1 | 4789 | BASE 6000 CRANE | 1 |
| 2 | 4792PC | SADDLE 6000 | 1 |
| 3 | 4032 | BEARING SWING DRIVE 6000 | 1 |
| 4 | 4817 | OUTRIGGER LEG SS 6000 | 1 |
| 5 | D0773 | CYLINDER 2.00X25.50 | 1 |
| 6 | 4816 | OUTRIGGER LEG CS 6000 | 1 |
| 7 | 3783 | CYLINDER 2.00X18.75 PAINTED BLK | 1 |
| 8 | C5902 | WASHER 0.63 SAE FLAT YELLOW GR8 | 24 |
| 9 | D1313 | CAP SCR 0.63-11X4.00 HHGR8 ZY | 20 |
| 10 | D1312 | CAP SCR 0.63-11X3.50 HHGR8 | 2 |
| 11 | 24868 | NUT 0.63-11 HHGR8 NYLOCK ZY | 2 |
| 12 | 0343 | WASHER 0.31 USS FLAT ZINC | 4 |
| 13 | 0420 | CAP SCR 0.31-18X0.75 HHGR5 | 4 |
| 14 | 11458 | MOTOR HYD 10 CU IN/ PNT BLK | 1 |
| 15 | 19248 | OUTRIGGER CAP ASM | 1 |
| 16 | 3945 | BUMPER DOCK 3X3.38X6 | 1 |
| 17 | 0504 | CAP SCR 0.50-13X3.00 HHGR5 | 2 |
| 18 | C6106 | NUT 0.50-13 HHGR5 NYLOC | 6 |
| 19 | 0352 | WASHER 0.50 USS FLAT ZINC | 8 |
| 20 | 0500 | CAP SCR 0.50-13X1.75 HHGR5 | 4 |
| 21 | 4912ZP | PIN 1.00X3.25 SR | 1 |
| 22 | 3875 | SNAP RING 1.00 INTERNAL | 4 |
| 23 | D0977ZP | PIN 1.00X3.75 | 1 |
| 24 | 9320 | PIN CAP 0.44X1.75X0.19 SS | 4 |
| 25 | 11688ZP | PIN 1.00X6.25D&T | 2 |
| 26 | 4876PC | PLATE SWITCH MTG 6000 | 1 |
| 27 | 0479 | CAP SCR 0.25-20X0.75 HHGR5 | 2 |
| 28 | 10974 | VB 2 SECT W/PB VDM6-4-4-YE-HP | 1 |
| 29 | 0489 | CAP SCR 0.31-18X2.50 HHGR5 | 2 |
| 30 | 0342 | NUT 0.31-18 HH NYLOC | 2 |
| 31 | c1592 | ZERK 1/8 NPT STRAIGHT | 1 |
| 32 | C2256 | FTG CPLR PIPE 0.13 | 1 |
| 33 | D1345 | FTG CPRSN 0.12NPT/0.25 TUBE | 2 |
| 34 | D1810 | TBE AIR SAEJ844 TYPE A .25 (RM) | 1 |
| 35 | 21151 | GASKET MOTOR 008-10056-1 | 1 |
| 36 | 30490 | CAP ASM OUTRIGGER SLANT | 1 |
| 37 | 7341 | PLUG 0.50 NICKEL PLATED | 1 |
| 38 | 0351 | CAP SCR 0.38-16X1.00 HHGR5 | 4 |
| 39 | 44605PC | GUARD TTB 6000 CRANE LZR | 1 |
| 40 | 62484 | CAP SCR 12MMX40MM SH | 2 |

# Mast Assembly - PN 22141

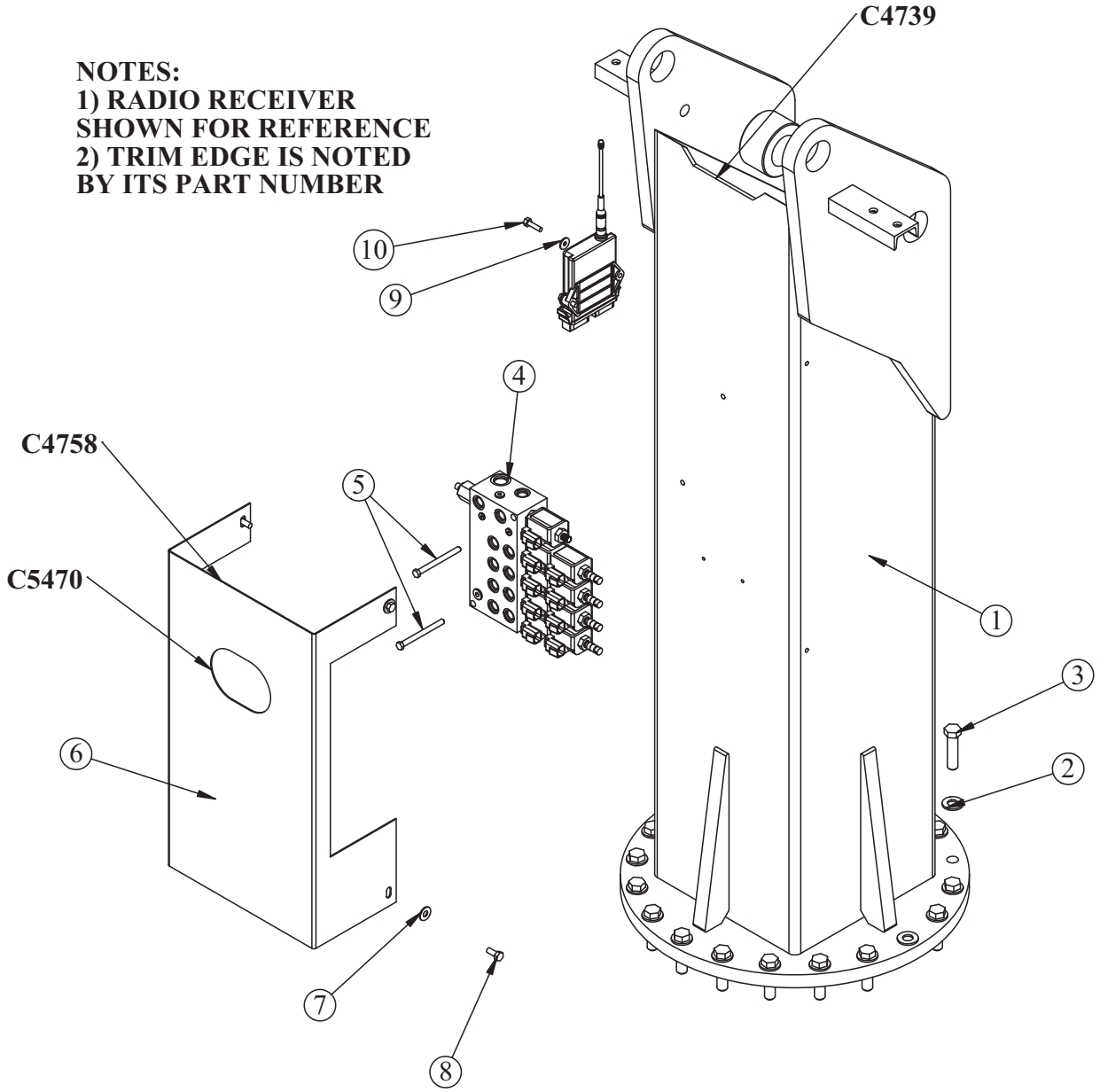


## PN 22141

| ITEM | PART | DESCRIPTION | QTY. |
|---|---|---|---|
| 1 | 4486 | MAST 6000 SERIES CRANE | 1 |
| 2 | C5902 | WASHER 0.63 SAE FLAT YELLOW GR8 | 20 |
| 3 | 66838 | CAP SCR 0.63-11X2.50 HHGR8 W/RED PATCH | 20 |
| 4 | 44530 | VB 4 SECT W/PROP STER8GPM DEUTSCH | 1 |
| 5 | 0490 | CAP SCR 0.31-18X3.50 HHGR5 | 2 |
| 6 | 26765PC | GUARD VB 6000 RADIO STERLING VB | 1 |
| 7 | 0343 | WASHER 0.31 USS FLAT ZINC | 4 |
| 8 | 0420 | CAP SCR 0.31-18X0.75 HHGR5 | 4 |
| 9 | D0917 | WASHER 0.25 FLAT SS | 2 |
| 10 | 0480 | CAP SCR 0.25-20X1.00 HHGR5 | 2 |

# Main Boom Assembly - PN 22142

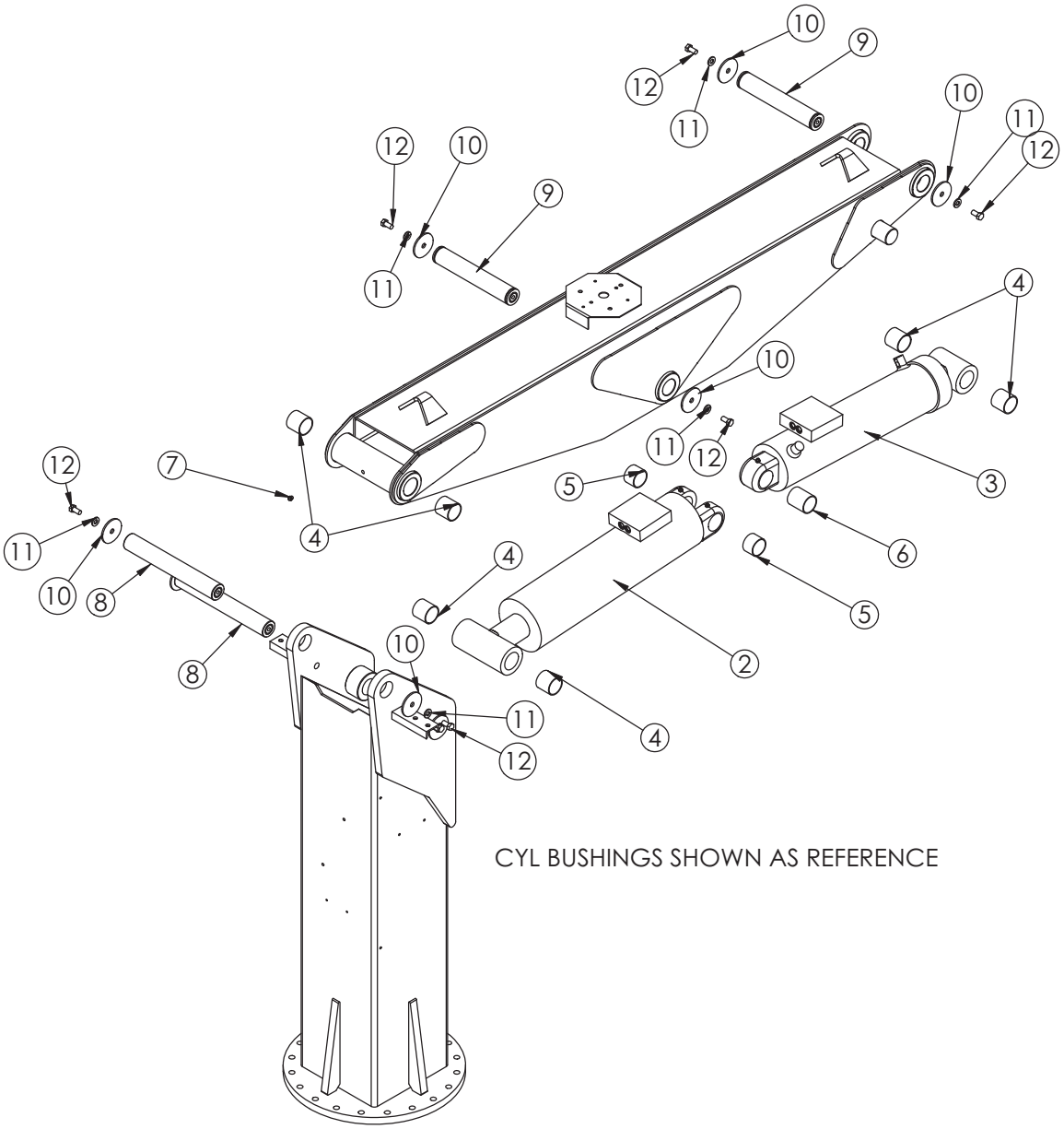


## PN 22142

| ITEM | PART | DESCRIPTION | QTY. |
|---|---|---|---|
| 1 | 4626 | INNER BOOM 6000 SERIES CRANE | 1 |
| 2 | 4656 | CYLINDER 60 SERIES INNER | 1 |
| 3 | 4657 | CYLINDER 60 SERIES OUTER | 1 |
| 4 | 4381 | BUSHING 32DXR32 2.00X2.00 GARLOCK | 6 |
| 5 | 4380 | BUSHING 32DXR24 2.00X1.50 GARLOCK | 2 |
| 6 | 4379 | BUSHING 32DXR40 2.00X2.50 GARLOCK | 1 |
| 7 | c1592 | ZERK 1/8 NPT STRAIGHT | 1 |
| 8 | 60029ZP | PIN 2.00X14.13 D&T | 2 |
| 9 | 35412ZP | PIN 2.00X11.88 SR | 2 |
| 10 | 5145 | PIN CAP 0.56X3.50X.25 | 8 |
| 11 | D0790 | WASHER 0.50 SAE FLAT YELLOW GR8 | 8 |
| 12 | 10172 | CAP SCR 0.50-13X1.00 HHGR8 | 8 |

# Extension Boom Assembly - PN 22143

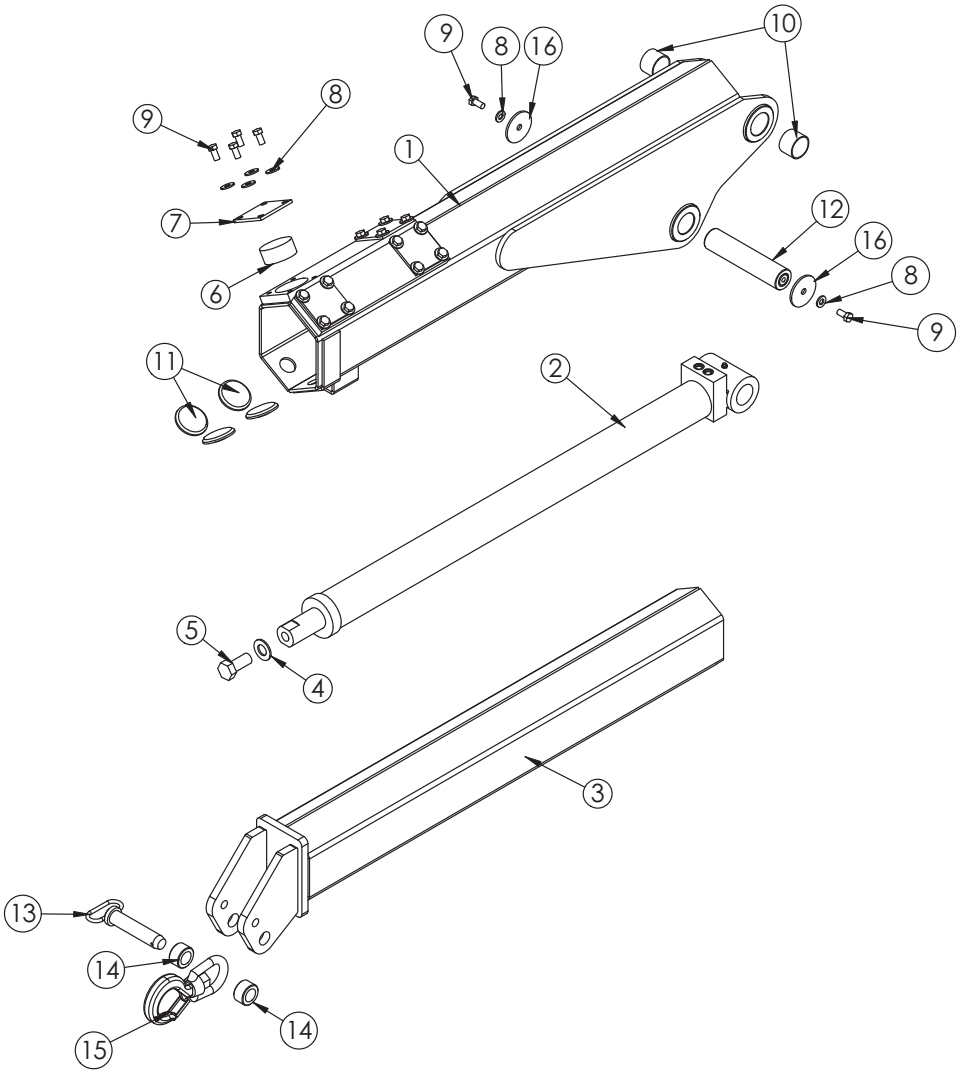


## PN 22143

| ITEM | PART | DESCRIPTION | QTY. |
|---|---|---|---|
| 1 | 4607 | OUTER BOOM 6000 SERIES CRANE | 1 |
| 2 | 4658 | CYLINDER EXT 60 SERIES | 1 |
| 3 | 4528 | EXT BOOM 6000 SERIES CRANE | 1 |
| 4 | 6538 | WASHER 1.00 SAE FLAT YELLOW GR8 | 1 |
| 5 | 5191 | CAP SCR 1.00-8X2.25 HHGR5 | 1 |
| 6 | 9435 | WEAR PAD 1.44X3.00 RND NYLATRON | 4 |
| 7 | 9434PC | PLATE WEAR PAD COVER 6000 | 4 |
| 8 | D0790 | WASHER 0.50 SAE FLAT YELLOW GR8 | 18 |
| 9 | 10172 | CAP SCR 0.50-13X1.00 HHGR8 ZY | 18 |
| 10 | 4380 | BUSHING 32DXR24 2.00X1.50 GARLOCK | 2 |
| 11 | 9364 | WEAR PAD 0.34X3.00 RND NYLATRON | 4 |
| 12 | 9711ZP | PIN 2.00X8.88 D&T | 1 |
| 13 | 5192 | PIN HITCH 1.25X5.13 | 1 |
| 14 | 5440PC | COLLAR 2.00X1.13 | 2 |
| 15 | 3863 | HOOK 5 TON | 1 |
| 16 | 5145 | PIN CAP 0.56X3.50X.25 | 2 |

# Chapter 8 - Hydraulics - Electrical

**WARNING!**
**Please read the following section before performing any work on the hydraulic/electrical system of your crane. This section contains vital safety information and maintenance guidelines for your crane. If questions should arise, please contact Stellar Customer Service at 800-321-3741**

Release system pressure before attempting to make adjustments or repairs.

Hydraulic fluid expands when heated. This raises the pressure in an unventilated tank. Release the tank pressure before removing the cap completely. Failure to do so may cause the oil to shoot out of the tank very rapidly and cause severe burns.

Warning! If hydraulic fluid escapes, the boom or crane can fall immediately. Make sure the ground or blocking is supporting the boom before performing any maintenance or repair. Do not rely on the hydraulic fluid to support the boom or crane.

Contaminants in a hydraulic system affect operation and will result in serious damage to the system components. Dirty hydraulic systems are a major cause of component failures.

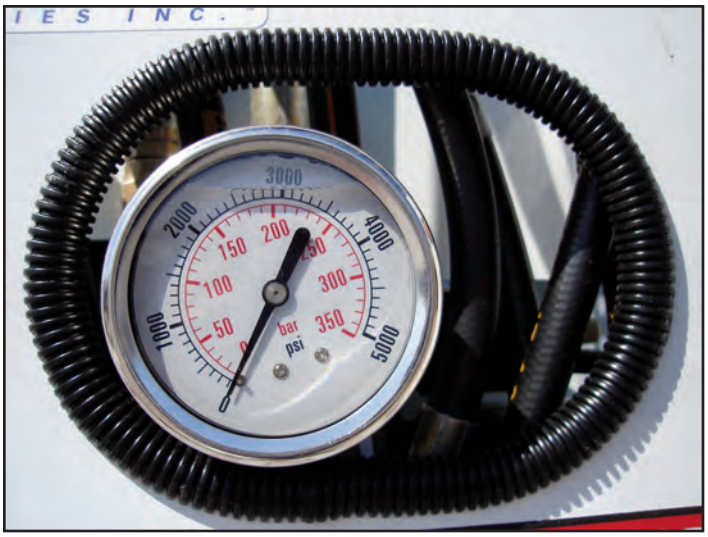


If evidence of foreign particles is found in the hydraulic system, flush the system.

Disassemble and assemble hydraulic components on a clean surface.

Clean all metal parts in a nonflammable cleaning fluid. Then lubricate all components to aid in assembly.

When installing metal hydraulic tubes, tighten all bolts finger tight. Then , in order, tighten the bolts at the rigid end, the adjustable end, and the mounting brackets. After tubes are mounted, install the hoses. Connect both ends of the hose with all bolts finger tight. Position the hose so it does not rub the machine or another hose and has a minimum of bending and twisting. Tighten bolts in both couplings.

Due to manufacturing methods, there is a natural curvature to a hydraulic hose. The hose should be installed so any bend is with this curvature.

# Control Kit - PN 52257

NOTE: WHEN ORDERING A TRANSMITTER,
DECAL P/N 34111 MUST ALSO BE ORDERED

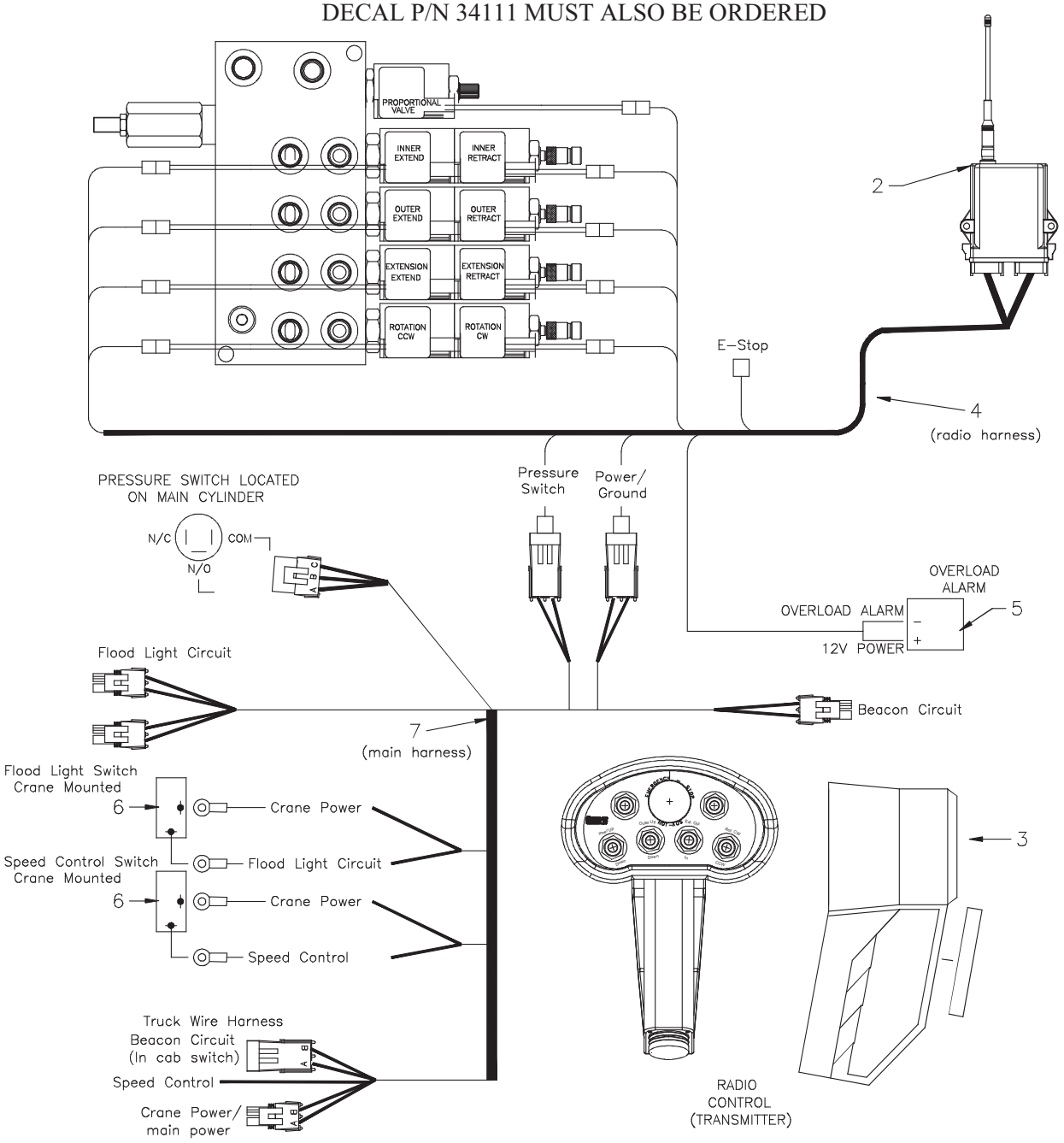


## PN 52257

| ITEM | PART No. | DESCRIPTION | QTY |
|---|---|---|---|
| 07 | 19076 | WIRE HARNESS – CRANE | 1 |
| 06 | C4815 | SWITCH TOGGLE ON/OFF | 1 |
| 05 | D0045 | OVERLOAD ALARM | 1 |
| 04 | 50921 | WIRE HARNESS – RADIO | 1 |
| 03 | 34102 | TRANSMITTER (PART OF 1) | 1ref |
| 02 | 34103 | RECEIVER (PART OF 1) | 1ref |
| 01 | 38992 | RADIO SYSTEM 6 FUNCTION | 1 |

# Hydraulic Kit - PN 13040

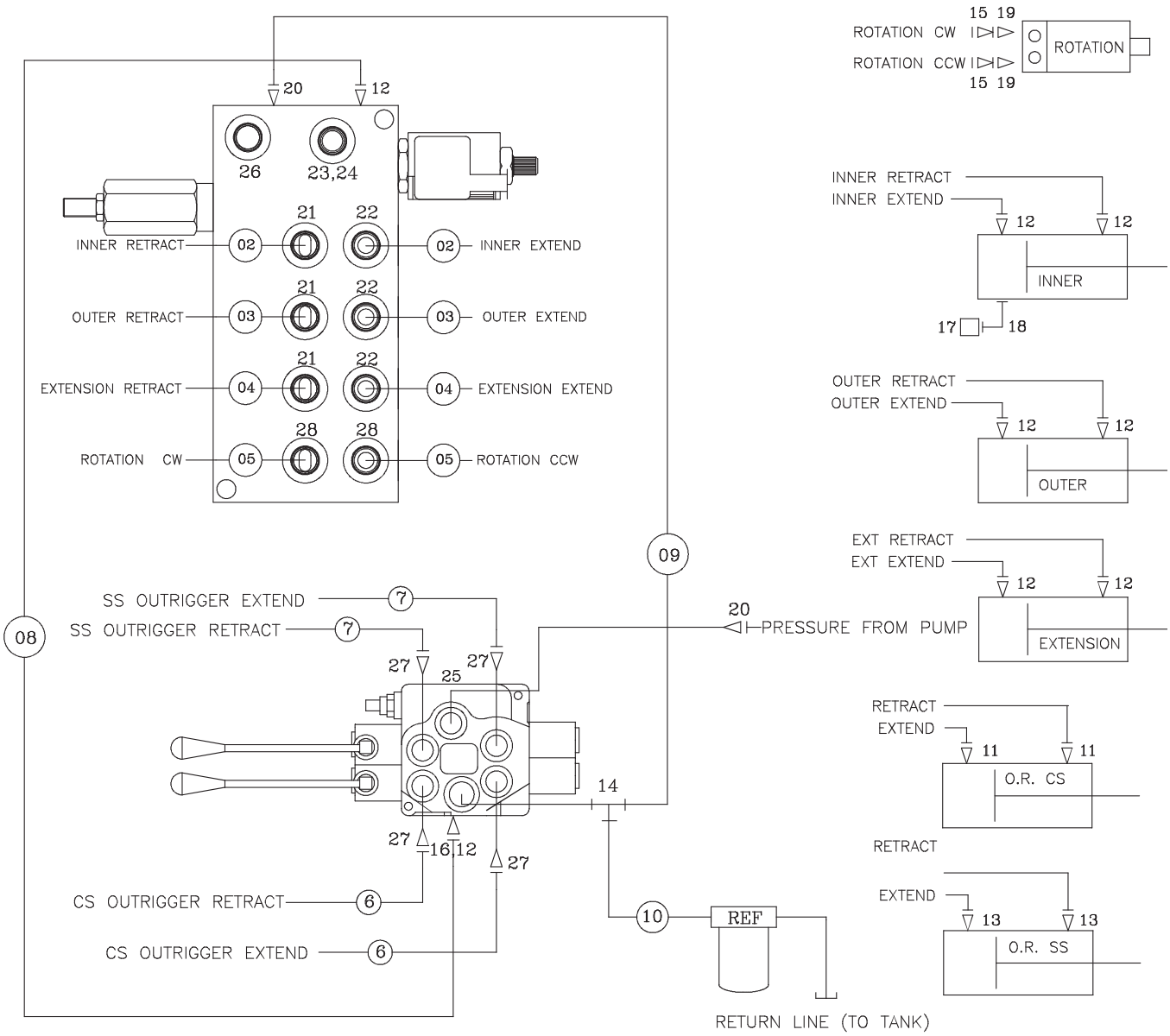


## PN 13040

| ITEM | PART No. | DESCRIPTION | QTY | ITEM | PART No. | DESCRIPTION | QTY |
|---|---|---|---|---|---|---|---|
| 14 | 7350 | FTG ST RUN TEE 8R5OLO | 1 | 28 | 3338 | FTG MF/MSTR 90 4–6 C5OLO–S | 2 |
| 13 | D1291 | FTG ADAPT 4–F5OLO–S | 2 | 27 | 12160 | FTG ADAPT 4–8 F5OLO | 4 |
| 12 | 0279 | FTG ADAPT 6–F5OLO–S | 8 | 26 | C4961 | PLUG STR HOLLOW HEX 0.38 6–HP5ON | 1 |
| 11 | C5572 | FTG ORFS/OBR 45 DEG ILL 4–V5OLO | 2 | 25 | D1535 | PLUG HOLLOW HEX | 1 |
| 10 | 13289 | HOSE–HYD .50 X 76 | 1ref | 24 | 6397 | PRESSURE GAUGE | 1 |
| 09 | 13023 | HOSE–HYD .50 X 120 | 1ref | 23 | D1430 | FTG ADAPT O'RING FMP 6–1/4 F50G–S | 1 |
| 08 | 13024 | HOSE–HYD .38 X 110 | 1ref | 22 | C0338 | FTG MF/MSTR 90 6–C5OLO–S | 3 |
| 07 | 13022 | HOSE–HYD .25 X 73 | 2ref | 21 | 25361 | FTG MF/MSTR LONG 90 6–CC5OLO–S | 3 |
| 06 | 7767 | HOSE–HYD .25 X 93 | 2ref | 20 | 1554 | FTG ADAPT 8–F5OLO–S | 2 |
| 05 | 5359 | HOSE–HYD .25 X 180 | 2ref | 19 | C1111 | FTG ADAPT MSTR/FSTR 10–6 F50G5 | 2 |
| 04 | 26768 | HOSE–HYD .38 X 120 | 2ref | 18 | 3861 | FTG ML FM O'RING 90 DEG | 1 |
| 03 | 12999 | HOSE–HYD .38 X 72 | 2ref | 17 | 49315 | SWITCH PRES OVERLD CD–11C–2900R/WD | 1 |
| 02 | 12998 | HOSE–HYD .38 X 54 | 2ref | 16 | C0885 | FTG ADAPT MSTR/FSTR 8–6 F50G5 | 1 |
| 01 | 13321 | HOSE KIT,6000 CRANE (incl:2–10) | 1 | 15 | C4922 | FTG ADAPT 4–6 F5OLO–S | 2 |

# Valve Bank - PN 44530

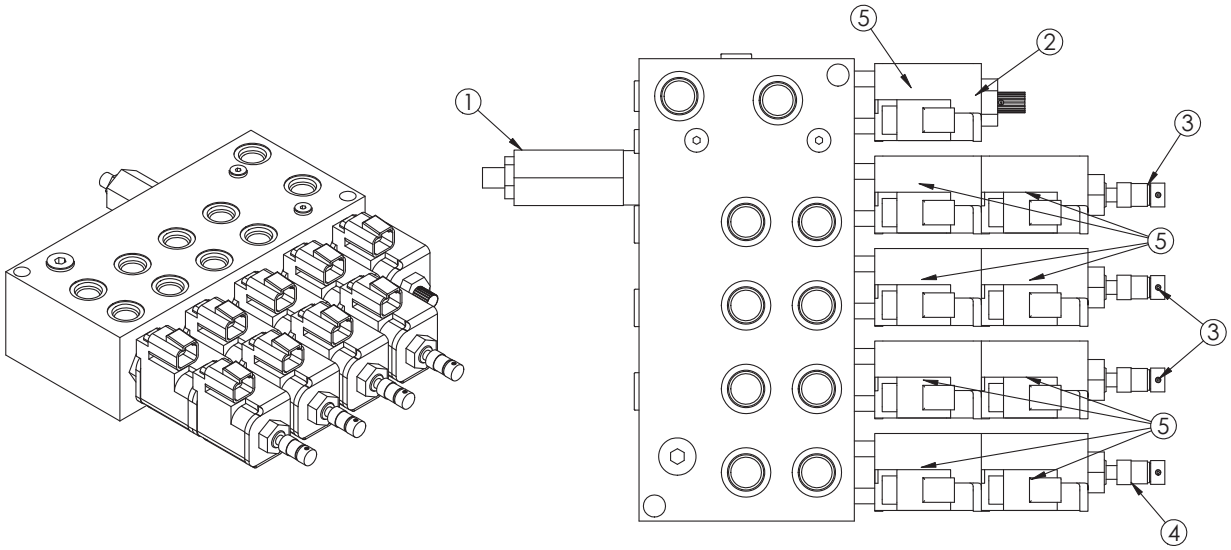


HYDRAULIC SCHEMATIC

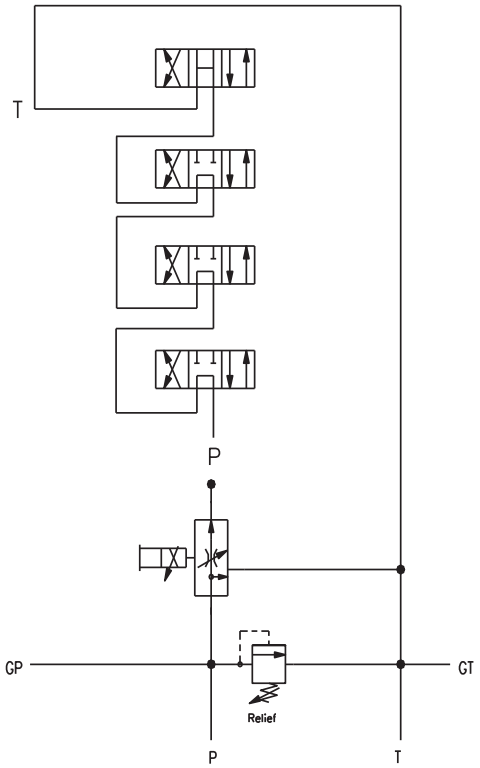


**PN 44530**

| ITEM | PART | DESCRIPTION | QTY |
|---|---|---|---|
| 1 | 25367 | RELIEF VALVE 24685/24690 | 1 |
| | 25368 | SEAL KIT 25367 | |
| 2 | 24960 | VALVE FLW CTRL PRP/JP04C3150N 0-8 | 1 |
| | 25369 | SEAL KIT 24960/25381 | |
| 3 | 25371 | VALVE SOLND 3 POS 4 WAY TAND G04571 | 3 |
| 4 | 25372 | VALVE SOLND 3 POS 4 WAY OPEN G04591 | 1 |
| | 25373 | SEAL KIT 25371/25372 | |
| 5 | 44532 | COIL 12VDC DUETSCH CAP012H | 9 |

# Hetronic Radio Remote - PN 34102

NOTE: 1) P/N'S 25999 & 24958 ARE OPTIONAL COVERS FOR THE SWITCHES AND TRIGGER
2) WHEN ORDERING A TRANSMITTER FOR A TIRE SERVICE CRANE, DECAL P/N 34111 MUST ALSO BE ORDERED

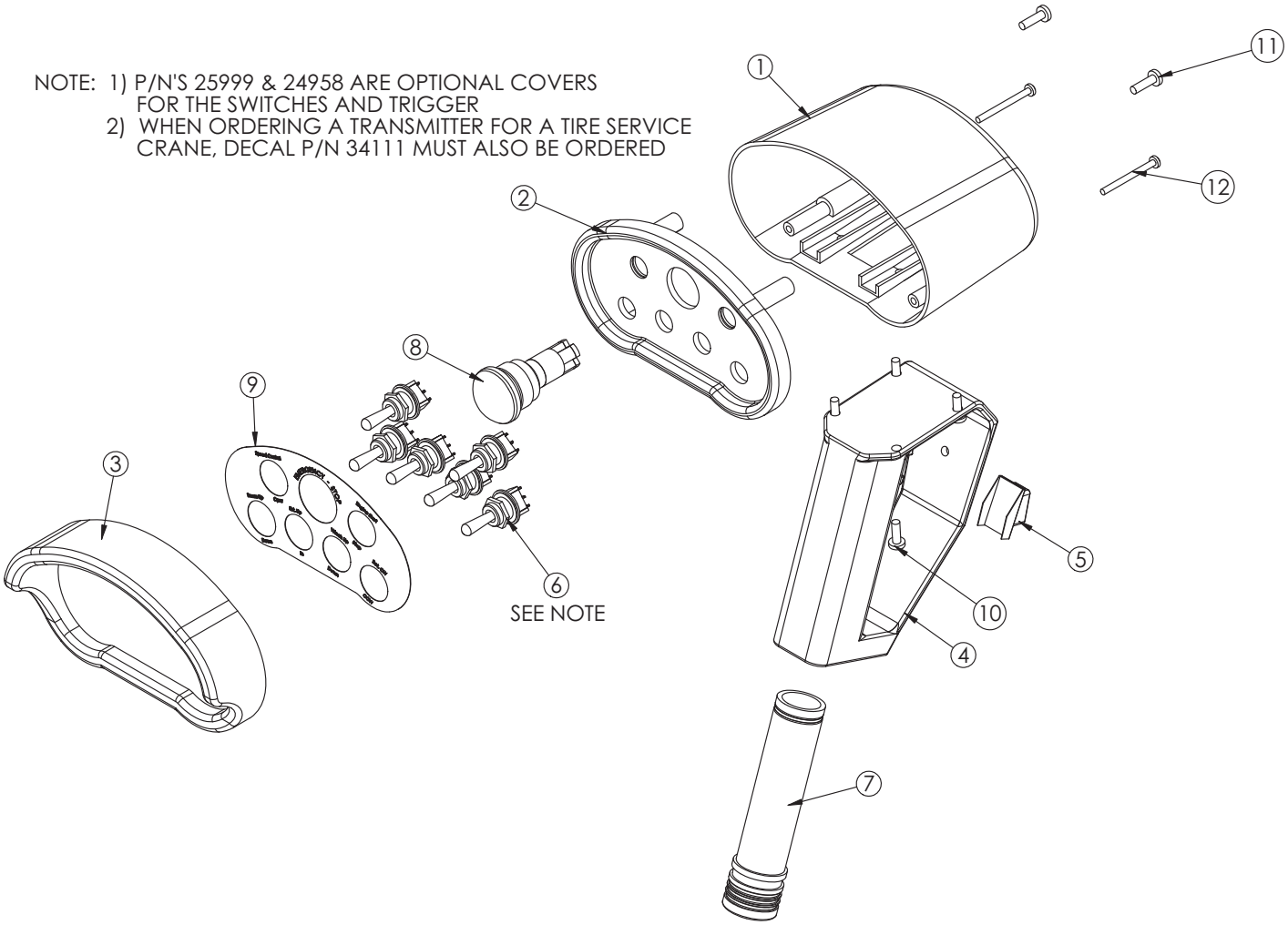


## PN 34102

| ITEM | PART | DESCRIPTION | QTY. |
|---|---|---|---|
| 1 | 20088 | CONTROL HANDLE HOUSING 4 FCTN HET | 1 |
| 2 | 34107 | CONTROL HANDLE FACE PLT 6 FCTN H2 | 1 |
| 3 | 24385 | GUARD RADIO SWITCH 4 FCTN | 1 |
| 4 | 35447 | CONTROL HANDLE GRIP W/TRIGGER HT H2 | 1 |
| 5 | 24958 | RUBBER BOOT TRIGGER GUARD HET | 1 |
| 6 | 22600 | SWITCH TOGGLE HET RADIO 63019300 | 6 |
| 7 | 35441 | BATTERY TUBE AA HETRONIC RADIO | 1 |
| 8 | 16975 | SWITCH E STOP ASM HETRONIC RADIO | 1 |
| 9 | 34110 | DECAL CONTROL HANDLE H2 6FCTN MECH | 1 |
| 10 | 38475 | SCREW 4MMX12MM PHMS PH | 4 |
| 11 | 36156 | SCREW 4MMX14MM PHMS PH | 2 |
| 12 | 29460 | SCREW 3MMX35MM PHMS PH | 2 |

# Chapter 9 - Replacement Parts

| | HYDRAULIC SYSTEM COMPONENTS |
|---|---|
| **PART#** | **DESCRIPTION** |
| 6397 | OIL PRESSURE GAUGE |
| 24960 | FLOW VALVE (PROPORTIONAL) |
| 25369 | SEAL KIT (FLOW VALVE) |
| 25367 | RELIEF VALVE |
| 25368 | SEAL KIT (RELIEF VALVE) |
| 25371 | SOLENOID VALVE (TANDEM) |
| 25372 | SOLENOID VALVE (OPEN) - ROTATION FUNCTION |
| 25373 | SEAL KIT (TANDEM AND OPEN VALVES) |
| 44532 | COIL (FLOW VALVE AND SOLENOID VALVES) |
| 49315 | PRESSURE SWITCH (OVERLOAD) |
| 9803 | COUNTER BALANCE VALVE (CYLINDERS) |
| 11458 | HYDRAULIC SWING MOTOR |
| 21151 | GASKET (HYDRAULIC SWING MOTOR) |
| C2027 | O RING (#4 FACE SEAL) (HYDRAULIC FITTINGS) |
| C2028 | O RING (#6 FACE SEAL) (HYDRAULIC FITTINGS) |
| C2029 | O RING (#8 FACE SEAL) (HYDRAULIC FITTINGS) |
| 32223 | O RING (#10 FACE SEAL) (HYDRAULIC FITTINGS) |
| D1245 | O RING (#4 SAE PORT SIDE) (HYDRAULIC FITTINGS) |
| D1246 | O RING (#6 SAE PORT SIDE) (HYDRAULIC FITTINGS) |
| D1247 | O RING (#8 SAE PORT SIDE) (HYDRAULIC FITTINGS) |
| D1248 | O RING (#10 SAE PORT SIDE) (HYDRAULIC FITTINGS) |
| 1099 | SEAL KIT (OUTRIGGER CYLINDER) |
| 11377 | SEAL KIT (MAIN CYLINDER 4656) |
| C6305 | SEAL KIT (SECONDARY CYLINDER 4657) |
| 1100 | SEAL KIT (EXTENSION CYLINDER) |

| | ASSEMBLY COMPONENT PARTS |
|---|---|
| **PART#** | **DESCRIPTION** |
| 4381 | BUSHING 2.00" X 2.00" |
| 4380 | BUSHING 2.00" X 1.00" |
| 4379 | BUSHING 2.00" X 2.50" |
| C1592 | GREASE ZERK 1/8 NPT STRAIGHT |
| 9435 | WEAR PAD 1.34" X 3.00" ROUND |
| 9364 | WEAR PAD 0.34" X 3.00" ROUND |
| 3863 | HOOK 5-TON |
| 5440 | COLLAR (HOOK) |
| 5192 | HITCH PIN 1.25" X 5.13" |
| #0110 | SNAP RING 1.00" ID |
| #0108 | SNAP RING 2.00" ID |
| 10710 | SAFETY LATCH |
| 29458 | WORM GEAR (ROTATION GEAR BEARING) |
| 27184 | BEARING AND SEAL KIT (ROTATION GEAR BEARING) |
| 3945 | BUMPER DOCK |

| | ELECTRICAL COMPONENTS |
|---|---|
| **PART#** | **DESCRIPTION** |
| 22600 | TOGGLE SWITCH (HETRONIC RADIO REMOTE) |
| 16975 | E-STOP SWITCH (HETRONIC RADIO REMOTE) |
| 35447 | HANDLE / TRIGGER ASM (HETRONIC RADIO REMOTE) |
| 35916 | CABLE BACK UP (HETRONIC RADIO REMOTE) |
| 35441 | BATTERY TUBE (HETRONIC RADIO REMOTE) |
| D0045 | ALARM (OVERLOAD) |
| 34102 | TRANSMITTER (HETRONIC RADIO SYSTEM) *NOTE: ORDER DECAL PN 34111 WHEN ORDERING.* |
| 34103 | RECEIVER (HETRONIC RADIO SYSTEM) |
| C4815 | TOGGLE SWITCH (OPTIONAL FLOODLIGHTS AND SPEED CONTROL) |

| | COMPRESSOR COMPONENTS (SHD66 OPTIONAL) |
|---|---|
| **PART#** | **DESCRIPTION** |
| 3853 | PILOT VALVE 145/175 PSI |
| C4913 | SOLENOID VALVE (SHD66 COMPRESSOR) |
| C4914 | PRESSURE RELIEF VALVE (SHD66 COMPRESSOR) |
| C0864 | AIR PRESSURE SWITCH -HOBBS (SHD66 COMPRESSOR) |
| 7471 | LOW PRESSURE INTAKE VALVE ASSEMBLY (SHD66 COMPRESSOR) |
| 7472 | HIGH PRESSURE INTAKE VALVE ASSEMBLY (SHD66 COMPRESSOR) |

| | SERVICE KITS / FILTERS / LUBRICATION |
|---|---|
| **PART#** | **DESCRIPTION** |
| 4559 | AIR FILTER (SHD66 COMPRESSOR) |
| C6227 | HYDRAULIC RETURN FILTER (CRANE / COMPRESSOR) |
| 8825 | SERVICE KIT - 200 HOUR (SHD66 COMPRESSOR) |
| 8823 | SERVICE KIT - 1-YEAR (CRANE / COMPRESSOR) |
| 4460 | MOLUBE GREASE-EXTERNAL GEAR TEETH FOR SWING GEAR BEARINGS) |
| C0087 | SYNTHETIC COMPRESSOR OIL ( 1 QT ) |

| | MISCELLANEOUS COMPONENTS |
|---|---|
| **PART#** | **DESCRIPTION** |
| 51592 | FLOOD LIGHTS (CRANE AND BODY) |
| 5033 | STROBE LIGHT (CRANE AND BODY) |

**Call 800-321-3741 to Order**

# Chapter 10 - Troubleshooting

**This chapter will list a number of potential problems that may occur while operating the crane. Most problems are easily solved using the solutions portion of this chapter. If problems persist, please contact Customer Service at Stellar Industries 1-800-321-3741.**

**Problem: Crane will not operate.**
**Solutions:**
- Make sure that the parking brake is engaged.
- Make sure that the PTO is engaged.
- Make sure that there is 12V power going to the radio receiver. If there is no power going to the receiver, trace back to the power source and check for a blown fuse or loose ground connection.
- Make sure that the transmitter batteries are fully charged. (Rechargeable batteries are good for 11 months or 200 charges)
- Make sure that the hydraulic pump is operating at its rated flow or GPMs. Check the flow by using the flow meter to determine the GPMs. It is possible that the hydraulic pump is getting weak. If this is suspected, contact Stellar Customer Service.

**Problem: Crane operates slowly.**
**Solutions:**
- Make sure that the crane is receiving the recommended GPMs to operate.
- Check the level of hydraulic fluid in the reservoir. Add fluid as needed.
- Check to see if the valve bank flow valve is operating.
- Make sure the proportional valve is receiving 12V power when operating a function.

**Problem: Crane will operate manually but will not operate electrically.**
**Solutions:**
- Make sure that there is 12V power going to the radio receiver. If there is no power going to the receiver, trace back to the power source and check for a blown fuse or loose ground connection.
- Make sure that the parking brake is engaged.
- Make sure that the parking brake switch is working properly. Check the parking brake switch by performing a continuity test. If the switch is defective, simply replace it.
- Make sure the “Power” LED is on outside the receiver door cover. This light is the upper light on the receiver door. If the light does not come on, check wiring back to the fuse. If the fuse is OK, check system ground wires and connections.
- Make sure the green LED on the receiver door is lit green. This light will come on when the red e-stop is pulled upward and the toggle switch is activated on the transmitter. If the radio system does not link up and no green light is lit on the receiver - make sure that the battery is fully charged, check the battery contact points to make s ure they are not tarnished or corroded. Clean contact points and recharge or replace the battery.
- When battery voltage is acceptable, the power LED light on the transmitter will be solid. If the voltage becomes low, the LED light will begin to blink and the battery will need to be charged or replaced.

**If problems persist, please contact Stellar Customer Service at: 1-800-321-3741**

**Problem: Cylinder drifts outward or downward.**
**Solutions:**

- Check to see if there is air in the hydraulic system. Operate all cylinders connected to the hydraulic system. Start with the extension cylinder, then operate the main boom, winch, rotation, and ending with the hydraulic outriggers, if installed. When operating, extend each cylinder halfway out, retract all the way in, and then extend until the cylinder rod is at the end of its stroke. Operate cylinders slowly so air is pushed thru the system to the reservoir. Repeat this cycle 2-3 times.
- Make sure the holding valves are operating properly. Remove, clean, and then inspect each holding valve. When removing a holding valve, always relieve the pressure inside the cylinder by loosening jam nut of the holding valve and turning set screw inward/clockwise. Count the number of turns until the set screw is seated. When reinstalling the holding valve, make sure the valve is reset by turning the set screw the number of turns it took to relieve the pressure. Finish by tightening the jam nut.
- Check the cylinder rod for scratches. If a scratch is located on the cylinder rod, hydraulic fluid can pass thru and cause a loss of pressure. Replace cylinder rod or cylinder.
- Check to see if the piston seals are damaged. If they show signs of damage, install a new cylinder seal kit.

**Problem: Crane will operate manually but will not operate electronically.**
**Solutions:**

- Make sure the "Power" LED is on outside the receiver door cover. This light is the upper light on the receiver door. If the light does not come on, check wiring back to the fuse. If the fuse is OK, check system ground wires and connections.
- Make sure the green LED on the receiver door is lit green. This light will come on when the red e-stop is pulled upward and the toggle switch is activated on the transmitter. If the radio system does not link up and no green light is lit on the receiver - make sure that the battery is fully charged, check the battery contact points to make s ure they are not tarnished or corroded. Clean contact points and recharge or replace the battery.
- When battery voltage is acceptable, the power LED light on the transmitter will be solid. If the voltage becomes low, the LED light will begin to blink and the battery will need to be charged or replaced.

**Problem: Not all crane functions operate using the radio remote transmitter or crane operates intermittently.**
**Solutions:**

- Make sure that the function switch is working properly. If the switch is defective, simply replace it.
- Make sure that there is power going from the valve bank twin solenoid or to the function that will not operate. If no power is going to the twin solenoid, check wiring connections on wire harness plug connector for broken wires, loose connection or poor crimp. If power is going to the solenoid valve, it may not be opening to allow hydraulic oil to the function that is not operating. Check the twin solenoid for polarity, if solenoid does not magnetize, replace the twin solenoid.

# Troubleshooting continued...

| Problem | Possible Cause | Possible Solution |
|---|---|---|
| Vibrations and jerking in hydraulic cylinder during the first maneuvers. | The temperature of the hydraulic oil is too low.<br><br>lack of oil in reservoir. | Perform maneuvers without loads for several minutes to warm up the oil.<br><br>Add hydraulic oil. |
| Vibrations with every function when oil is hot. | Lack of oil in reservoir.<br><br>air in hydraulic system. | Add hydraulic oil to the tank.<br><br>Operate the control carrying the cylinders to stroke end several times in both directions. |
| All crane movements are slow, loaded and unloaded. | Suction hose from oil tank crushed or obstructed.<br><br>Dump valve malfunctioning.<br><br>The pump is drawing in air. | Replace or clean the suction hose.<br><br>Manually override system to detect<br><br>Tighten suction hose connections. |
| The hydraulic extension is not extending. | Bad lubrication.<br><br>Wear pads are worn.<br><br>Sequence valve on extension cylinder has to be adjusted. | Lubricate the wear pads<br><br>Replace wear pads.<br><br>Check to see if there is 12V power going to the extension function. |
| Crane rotation not regular | Inadequate grease.<br><br>The truck is not level.<br><br>Worn rotation motor.<br><br>Gear bearings worn. | Grease gear bearing.<br><br>Level the truck.<br><br>Replace rotation motor.<br><br>Replace gear. |
| The crane does not lift the loads on the load chart. | Defective hydraulic pump.<br><br>Incorrect settings of the valves.<br><br>Hydraulic cylinder seals are worn. | Replace the pump.<br><br>Adjust valve settings.<br><br>Replace worn seals. |
| The crane lifts the load, but cannot hold it. | Incorrect relief setting.<br><br>Faulty holding valve.<br><br>Incorrect settings of the valves.<br><br>Hydraulic cylinder seals are worn. | Contact Stellar customer service for proper setting.<br>Replace holding valve.<br><br>Adjust valve settings.<br><br>Replace worn seals. |
| Noise coming from Articulation points. | Lack of lubrication.<br><br>Worn pin.<br><br>Worn bushing. | Grease articulation points.<br><br>Replace pin.<br><br>Replace bushing. |

| Problem | Possible Cause | Possible Solution |
|---|---|---|
| Hydraulic legs do not hold under load. | Defective holding valves<br><br>Worn seals in the stabilizer cylinder. | Clean or replace holding valves.<br><br>Replace worn seals. |
| Crane does not function. | Truck battery discharged<br><br>Electric connections are damaged or corroded.<br><br>Control handle turned off. | Charge battery.<br><br>Check electrical wiring, terminals, connections and their integrity.<br><br>Turn on control handle |
| Crane does not function - Continued | Battery charge low.<br><br>Burned fuses<br><br>Dump valve not operating properly.<br><br>PTO not fully engaged. | Charge transmitter battery.<br><br>Replace the fuses.<br><br>Bypass electrical circuit<br><br>Check for full engagement. |
| Control box lights do not operate (green LED out) | Discharged battery.<br><br>Burned fuses.<br><br>Disconnected electrical cord.<br><br>Corroded or loose electrical connections.<br><br>Faulty manual/remote switch. | Recharge battery.<br><br>Replace fuses.<br><br>Join correctly the connection, replace the electric coupling.<br>Check electrical connections.<br><br>Replace switch. |
| A crane function does not work. | Defective switch.<br><br>Faulty solenoid.<br><br>Locked valve cartridge.<br><br>Damaged electric connection. | Replace the switch.<br><br>Replace the solenoid.<br><br>Disassemble and clean the valve cartridge.<br>Check continuity of the circuit. |
| Operations at high or low speed do not work. | Parameters of control box (receiver) set incorrectly or have failed. | Contact Stellar customer service department. |
| Controls fail to respond with control box. | Batteries dead in wireless handle.<br><br>Handle on/off button isn't turned on.<br><br>Manual/remote switch is in manual position. | Recharge or replace batteries in remote handle.<br>Turn on on/off button on remote handle.<br>Position manual/remote switch in remote position. |
| Operation slow down. | Hydraulic oil supply is low.<br><br>Hydraulic pump is operating at a reduced speed.<br><br>Relief valve is set too low.<br><br>Pump or cylinder is worn. | Add hydraulic oil.<br><br>Engine idle speed may be too slow, increase speed.<br><br>Check relief with gauge.<br><br>Replace cylinder seals. |

| Problem | Possible Cause | Possible Solution |
|---|---|---|
| Operation slow down - con't | Pump is slipping due to excessive oil temperature, this is a factor which will increase with worn components.<br><br>Filters are dirty.<br><br>Obstruction has occurred in boom holding valve. | Check pump GPM with flow meter if it is suspected to be faulty.<br><br>Replace filters.<br><br>Replace or clean holding valve. |
| Operation slow down - con't | Defective flow valve. | Replace valve. |
| Boom drifts when loaded and controls neutralized. | Hydraulic oil is bypassing at piston seal.<br><br>Main or secondary cylinder holding valves are defective or contaminated. | Replace cylinder.<br><br>Clean or replace holding valves. |
| Unusual noise in operation. | Cavitation is occurring due to low hydraulic oil supply.<br><br>Restriction or collapse of suction line has occurred.<br><br>Suction line screen is clogged and requires replacement. | Add oil and cycle cylinders to get air out of system.<br><br>Inspect suction line for damage.<br><br>Replace or clean screen. |
| Unusual noise in operation - con't | Bypass settings on relief valve are too low.<br><br>Relief valve is damaged. | Contact customer service for correct relief setting.<br><br>Replace relief valve. |
| Outriggers fail to retract | Control valve is inoperative.<br><br>Cylinder seals or holding valve are defective<br><br>Hydraulic lines are restricted or ruptured. | If outriggers retract using manual function, it is a probable electrical problem - check continuity.<br><br>Replace seals or holding valve.<br><br>Inspect and replace hydraulic lines. |
| Outriggers fail to retract-con't | Broken electrical wire going to outrigger switch to the valve bank. | Check continuity of circuit. |
| Outriggers yield or drift. | Control valve is inoperative.<br><br>Cylinder or check valve is defective.<br>Hydraulic lines are restricted or ruptured. | Clean or replace pulsar solenoid valve.<br>Replace holding valve.<br><br>Check hoses for damage and replace. |

# 6 Function Hetronic Radio Remote Troubleshooting

*If the system does not operate after normal start-up, follow the recommended troubleshooting sequence to help isolate the cause and determine corrective action.*

**Transmitter**

- Is the E-Stop pushbutton pulled out?
- Are all the switches in their center (neutral) position.
- Are the batteries in the transmitter fully charged?
- Is the transmitter inside its operating range?

**Receiver**

- Is the antenna plug securely connected?
- If there is an external antenna, is the antenna connection assembly outside the enclosure secure?
- Are the power supply and ground wires securely fastened?
- Are the signal wires separated from the power supply wires?

| PROBLEM | PROBABLE CAUSE | CORRECTION |
|---|---|---|
| System will not operate after normal start-up procedure. | E-Stop switch engaged | Pull out E-Stop switch. |
| | Batteries fully discharged | Check batteries to ensure a full charge. Replace with new batteries if necessary. |
| | No power to the receiver | Check the diagnostic LED on the receiver to be sure power is applied. Ensure that the system is properly grounded. |
| Transmitter is transmitting (Power LED flashing), but crane will not respond | E-Stop switch engaged | Pull out the E-Stop push button and activated switch on transmitter. |
| | Transmitter out of range | Take the transmitter back into the range of the receiver. |
| | Receiver power off | Turn on power to receiver. |
| | E-Stop failure in transmitter | Check E-Stop pushbutton for damage. Check wiring to contact element for broken or disconnected wires. Repair or replace E-Stop push button or wiring. |
| All crane motions operate intermittently | Receiver antenna is loose or missing | Tighten or replace antenna. |
| | External antenna (if used) has loose connection, poor grounding or interference | Tighten antenna and ground connection. |
| | Ground wiring is poor. Conductor is too small, or receiver is grounded to chassis. | Ground wiring must be connected to machine power source ground. Minimum diameter of conductor ground is 12 AWG. |
| Some crane motions operate intermittently | Crane motion wiring may be loose. | Check wiring from receiver to plug and from plug to crane motion actuator. |

# Transmitter Troubleshooting

Notice: When testing the transmitter, the receiver may become active resulting in system operation. Always assume the system is working and will respond when testing a transmitter.

## Status LED Troubleshooting

| LED Indication | Possible Cause |
|---|---|
| LED is off | Transmitter is off |
| LED flashes | Transmitter is operating in a normal mode |
| LED will not light when any button is pushed, or LED remains on continuously | Replace batteries. If this does not correct the problem, the transmitter must be returned for repair. |

## Transmitter Repairs

Notice: The transmitter electronic components are exposed when the back of the case is removed. Take caution to prevent dirt or other contaminants from entering the case. Do not allow the circuit to be scraped or damaged in any way.

# Receiver Troubleshooting

The following steps should be followed when troubleshooting the receiver.

1. Check the LED indicator. If it is not lit:
   a. Make sure 12 VDC and ground is present at the connecting wires.
   b. If using the AC power, check for AC power on the connecting wires.
   c. If input power is present and the LED is off, check the fuse inside the receiver case.
   d. If input power is present and the LED is off, and the fuse inside the receiver case is OK, contact Customer Service at Stellar Industries.
2. Activate the transmitter by pressing any command switch.
   a. If the receiver LED does not flash, test the transmitter.
   b. Verify the identity code is the same for the transmitter and receiver. use the learn button to re-program the receiver for the transmitter.
   c. Contact Customer Service at Stellar Industries.
3. Only some functions are operating:
   a. Check to make sure the common wires for the relays are connected properly. (See Installation drawings for details.
   b. Check output voltage of the respective wires and the electrical circuits.
   c. Check the fuses inside the receiver case.
   d. Check the receiver label to verify the function has been programmed to the needs of the equipment.
4. You are experiencing intermittent operation:
   a. Check antenna connections and antenna location.
   b. On AC systems, ensure noise suppression devices have been placed across the coils of all contacts.
   c. Ensure you are inside the operating range of the receiver and have line of sight to the receiver antenna.
5. Operating Range is short:
   a. Check all antenna connections and transmitter operation.
   b. On new installations, verify the receiver antenna is placed properly. If necessary, use an antenna mounting kit to relocate the antenna to a more favorable location.

## Receiver Testing

| LED Indication | Receiver Action |
|---|---|
| LED on continuous | Receiver operating voltage is present, no signal is being received. |
| LED flashes | Signal is being received that matches the decoders address. |
| LED goes off | Signal is being received, but address is wrong. |

## Limited Warranty Statement

Stellar Industries, Inc. (Stellar) warrants products designed and manufactured by Stellar to be free from defects in material and workmanship under proper use and maintenance. Products must be installed and operated in accordance with Stellar's written instructions and capacities. This warranty shall cover the following:

**Stellar Cranes, Stellar Hooklift Hoists, Stellar Cable Hoists, Stellar Container Carriers, Stellar Service Trucks, and Stellar X-Tra-Lift Systems:**
*Twelve (12) month warranty on parts from the date recorded by Stellar as the in-service date, not to extend beyond twenty-four (24) months from date of manufacture,*
*Twelve (12) month repair labor from the date recorded by Stellar as the in-service date, not to extend beyond twenty-four (24) month from date of manufacture, and*
*Thirty-six (36) month warranty on all Stellar Manufactured structural parts from the date recorded by Stellar as the in-service date, not to extend beyond forty-eight (48) months from date of manufacture.*

**Stellar Tarper Systems:**
*Twelve (12) month warranty on parts from the date recorded by Stellar as the in-service date, not to extend beyond twenty-four (24) months from date of manufacture and*
*Three (3) month repair labor from the date recorded by Stellar as the in-service date, not to extend beyond fifteen (15) month from date of manufacture.*

The in-service date will be derived from the completed warranty registration card. In the event a warranty registration card is not received by Stellar, the factory ship date will be used.

Stellar's obligation under this warranty is limited to, and the sole remedy for any such defect shall be, the repair and/or replacement (at Stellar's option) of the unaltered part and/or component in question. Stellar after-sales service personnel must be notified by telephone, fax, or letter of any warranty-applicable damage within fourteen (14) days of its occurrence. If at all possible, Stellar will ship the replacement part within 24-hours of notification by the most economical, yet expedient, means possible. Expedited freight delivery will be at the expense of the owner.

Warranty claims must be submitted and shall be processed in accordance with Stellar's established warranty claim procedure. Stellar after-sales service personnel must be contacted prior to any warranty claim. A return materials authorization (RMA) account number must be issued to the claiming party prior to the return of any warranty parts. Parts returned without prior authorization will not be recognized for warranty consideration. All damaged parts must be returned to Stellar freight prepaid; freight collect returns will be refused. Freight reimbursement of returned parts will be considered as part of the warranty claim.

Warranty service will be performed by any Stellar new equipment distributor, or by any Stellar-recognized service center authorized to service the type of product involved, or by the Stellar factory in the event of a direct sale. At the time of requesting warranty service, the owner must present evidence of date of delivery of the product. The owner shall be obligated to pay for any overtime labor requested of the servicing company by the owner, any field service call charges, and any towing and/or transportation charges associated with moving the equipment to the designated repair/service provider.

All obligations of Stellar and its authorized dealers and service providers shall be voided if someone other than an authorized Stellar dealer provides other than routine maintenance service without prior written approval from Stellar. In the case repair work is performed on a Stellar-manufactured product, original Stellar parts must be used to keep the warranty in force. The warranty may also be voided if the product is modified or altered in any way not approved, in writing, by Stellar.

The owner/operator is responsible for furnishing proof of the date of original purchase of the Stellar product in question. Warranty registration is the ultimate responsibility of the owner and may be accomplished by the completion and return of the Stellar product registration card provided with the product. If the owner is not sure of registration, he is encouraged to contact Stellar at the address below to confirm registration of the product in question. This warranty covers only defective material and workmanship. It does not cover depreciation or damage caused by normal wear and tear, accident, mishap, untrained operators, or improper or unintended use. The owner has the obligation of performing routine care and maintenance duties as stated in Stellar's written instructions, recommendations, and specifications. Any damage resulting from owner/operator failure to perform such duties shall void the coverage of this warranty. The owner will pay the cost of labor and supplies associated with routine maintenance.

The only remedies the owner has in connection with the breach or performance of any warranty on the Stellar product specified are those set above. In no event will Stellar, the Stellar distributor/dealer, or any company affiliated with Stellar be liable for business interruptions, costs of delay, or for any special, indirect, incidental, or consequential costs or damages. Such costs may include, but are not limited to, loss of time, loss of revenue, loss of use, wages, salaries, commissions, lodging, meals, towing, hydraulic fluid, or any other incidental cost.

All products purchased by Stellar from outside vendors shall be covered by the warranty offered by that respective manufacturer only. Stellar does not participate in, or obligate itself to, any such warranty.

Stellar reserves the right to make changes in design or improvement upon its products without imposing upon itself the same upon its products theretofore manufactured.

This warranty will apply to all Stellar Cranes, Stellar Hooklift Hoists, Stellar Cable Hoists, Stellar Container Carriers, Stellar Service Trucks, Stellar X-Tra-Lift Systems, and Stellar Tarper Systems shipped from Stellar's factory after January 1st, 2010. The warranty is for the use of the original owner only and is not transferable without prior written permission from Stellar.

THIS WARRANTY IS EXPRESSLY IN LIEU OF ANY OTHER WARRANTIES, EXPRESS OR IMPLIED, INCLUDING ANY WARRANTY OF MERCHANTABILITY OR FITNESS FOR A PARTICULAR PURPOSE. REMEDIES UNDER THIS WARRANTY ARE LIMITED TO THE PROVISION OF MATERIAL AND SERVICES, AS SPECIFIED HEREIN. STELLAR INDUSTRIES, INC. IS NOT RESPONSIBLE FOR INCIDENTAL OR CONSEQUENTIAL DAMAGES.

Revision Date: February 2010

Document Number: 37040